MODEL AT320 OPERATION MANUAL

COPYRIGHT © AUGUST, 2008 BY BOLTON HARDWARE
WARNING: NO PORTION OF THIS MANUAL MAY BE REPRODUCED IN ANY SHAPE
OR FORM WITHOUT THE WRITTEN APPROVAL OF BOLTON HARDWARD
PRINTED IN CHINA

⚠ WARNING !

This manual provides critical safety instructions on the proper setup, operation, maintenance and service of this machine/equipment. Failure to read, understand and follow the instructions given in this manual may result in serious personal injury, including amputation, electrocution or death.
The owner of this machine/equipment is solely responsible for its safe use. This responsibility includes but is not limited to proper installation in a safe environment, personnel training and usage authorization, proper inspection and maintenance, manual availability and comprehension, application of safety devices, blade/cutter integrity, and the usage of personal protective equipment.
The manufacturer will not be held liable for injury or property damage from negligence, improper training, machine modifications or misuse.

some dust created by power sanding, sawing, grinding, drilling, and other construction activities contains chemicals known to the State of California to cause cancer, birth defects or other reproductive harm. Some examples of these chemicals are:

- **Lead from lead-based paints.**
- **Crystalline silica from bricks, cement and other masonry products.**
- **Arsenic and chromium from chemically-treated lumber.**

Your risk from these exposures varies, depending on how often you Do this type of work. To reduce your exposure to these chemicals: Work in a well ventilated area, and work with approved safety equipment, such as those dust masks that are specially designed to filter out microscopic particles.

Table of Contents

INTRODUCTION 1
Machine Data Sheet 1
Identification 3
SECTION 1: SAFETY 4
Safety Instructions for Machinery 4
Additional Safety Instructions for Lathe/Mills 5
Glossary of Terms 6
220V Single-Phase 7
SECTION 2: LIFTING AND INSTALLATION 8
SECTION 3: LATHE OPERATIONS 9
Belt Adjustment or Replacement 9
Use the compound rest and the tool post 9
Using the Manual Feed Hanwheel 10
Use power feed handle 10
Use the tailstock 11
Driiing with the tailstock 11
Setting the spindle speed RPM 12
Setting the powe feed rate 13
Setup for thread 14
Change Gear Chart 15
Using the steady rest 16
Using the follow rest 16
Using the centers 17
Mounting the chuck and faceplate 18
Replace the jaws 19
Using the Four –jaw chuck 20
Using the faceplate 21
SECTION 4: MILL AND DRILL OPERATIONS 22
Test Run & Break-In 22
Turn round 22
Tilt angle 22
Using Mill Table 22
Using Machine Vice 23
Using Block 23
Install Cutter 23
Setting the Spindle RPM 24
Using the Mill 24
SECTION 5: MAINTENANCE 25
Basic Maintenance 25
Lubrication Positions List 26
Gib Adjustment 27
SECTION 6: ACCESSORIES 28
Electrical Component and Connection Index 29
Wiring Diagram 33
SECTION 7: PARTS 34
Uprigt Column Diagram 34
Uprigt Column Parts 35
Bed Diagram 36
Bed Parts 37
Lathe Head Diagram 39
Lathe Head Parts 40
Tailstock Diagram 42
Tailstock Parts 43
Left Trestle Diagram 44
Left Trestle Parts 45
Apron Diagram 46
Apron Parts 47
Compound Box Diagram 49
Compound Box Parts 50
Drill-Mill Head Diagram 51
Drill-Mill Head Parts 52

⚠ WARNING !

Connection is 110v/60hz for this machine in factory

When customers need access to 220V power supply,
PLEASE TURN OFF THE POWER OF THE MACHINE,
A): open the plate on electrical box behind of the lathe head, find the control transformer (JBK5-63), the power transformer input are two ways: code 12 and code 11 for the 110V power input, the code 12 and code 10 for the 220V power supply Enter please removed on the code 11th line, access code 10 side;
B): respective dismount the junction box of the lathe spindle motor milling spindle motor and the drilling motor, according to the electrical wiring diagram, and access to 220V power supply wire terminals.

110V/220V Motor

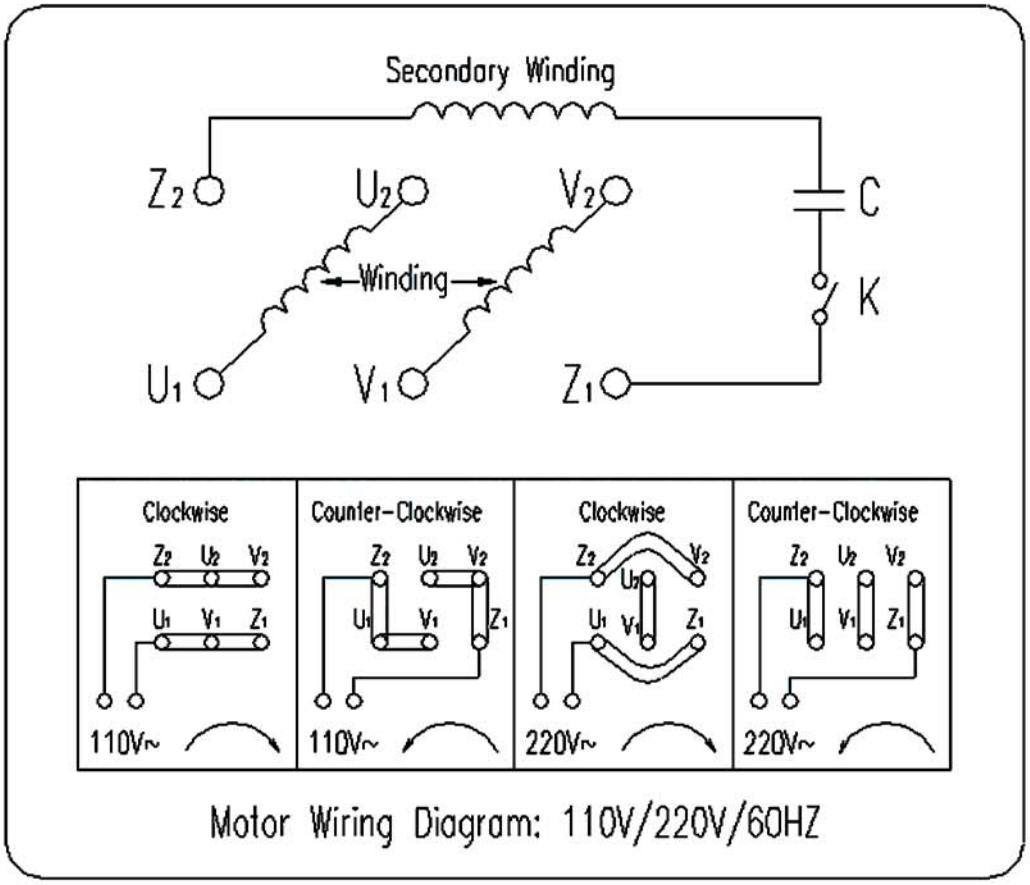

Motor Wiring Diagram: 110V/220V/60HZ

Machine Data Sheet

Lathe Information	Spindle Bore	1-1/2"
	Lathe Spindle Taper	MT#5
	Tailstock Taper	MT#3
	Tailstock Barrel Travel	3-5/16"
	Number of Lathe Speeds	12
	Lathe Speeds	75, 110, 140, 200, 240, 350, 420, 600, 720, 1050, 1250, 1900 RPM
	Cross Slide Travel	6-1/4"
	Thread Range (inches)	28 @ 5–48 TPI
	Thread Range (metric)	21 @ 0.45–6.0 mm
	Lathe Swing Over Bed	12-1/2"
	Distance Between Centers	29"
Mill Information	Mill/Drill Spindle Taper	R8
	Mill Swing	14-1/2"
	Mill Spindle to Worktable Capacity	17-1/4"
	Number of Mill Speeds	4
	Mill Speed Range	240, 600, 1100, 2700 RPM
	Headstock Tilt	90°L & R

Motors		Lathe Motor	Mill Motor
	Type	TEFC Capacitor Start Induction	
	Horsepower	1-1/2 HP	3/4 HP
	Voltage	220V or 110V	
	Phase	Single	
	Amps	220V/8A,110V/15A	220V/6A,110V/11A
	Speed	1725 RPM	
	Cycle	60 Hz	
	Power Transfer	V-Belt Drive	Gear Drive
	Bearings	Shielded and Lubricated	

MACHINE DATA SHEET

Electrical	Mill Power Switch	Toggle On/Off with Safety Lock Tab
	Lathe Power Switch	Emergency Push-button Kill Switch w/Manual Reset
	Control Voltage	24VAC
	Cord Length	4 ft.
	Cord Gauge	14 gauge
	Recommended Breaker Size	30A
	Plug	No

Product Dimensions	Approximate Net Weight	1200 lbs
	Overall Dimensions	67-3/4" Wide x 26-3/4" Deep x 72" Tall
	Footprint	16-1/2" Deep x 59-1/4" Wide
	Approximate Shipping Weight	1400 lbs

Others	Drill Chuck	1-13mm JT-33
	4-Jaw Chuck	8"
	3-Jaw Chuck	w/Int. & Ext. Jaws, 6"
	Faceplate	8"
	Tool Holder	4-Way Turret Tool Post
	Change Gears	Steel
	Dead Centers	MT5 & MT3

IDENTIFICATION

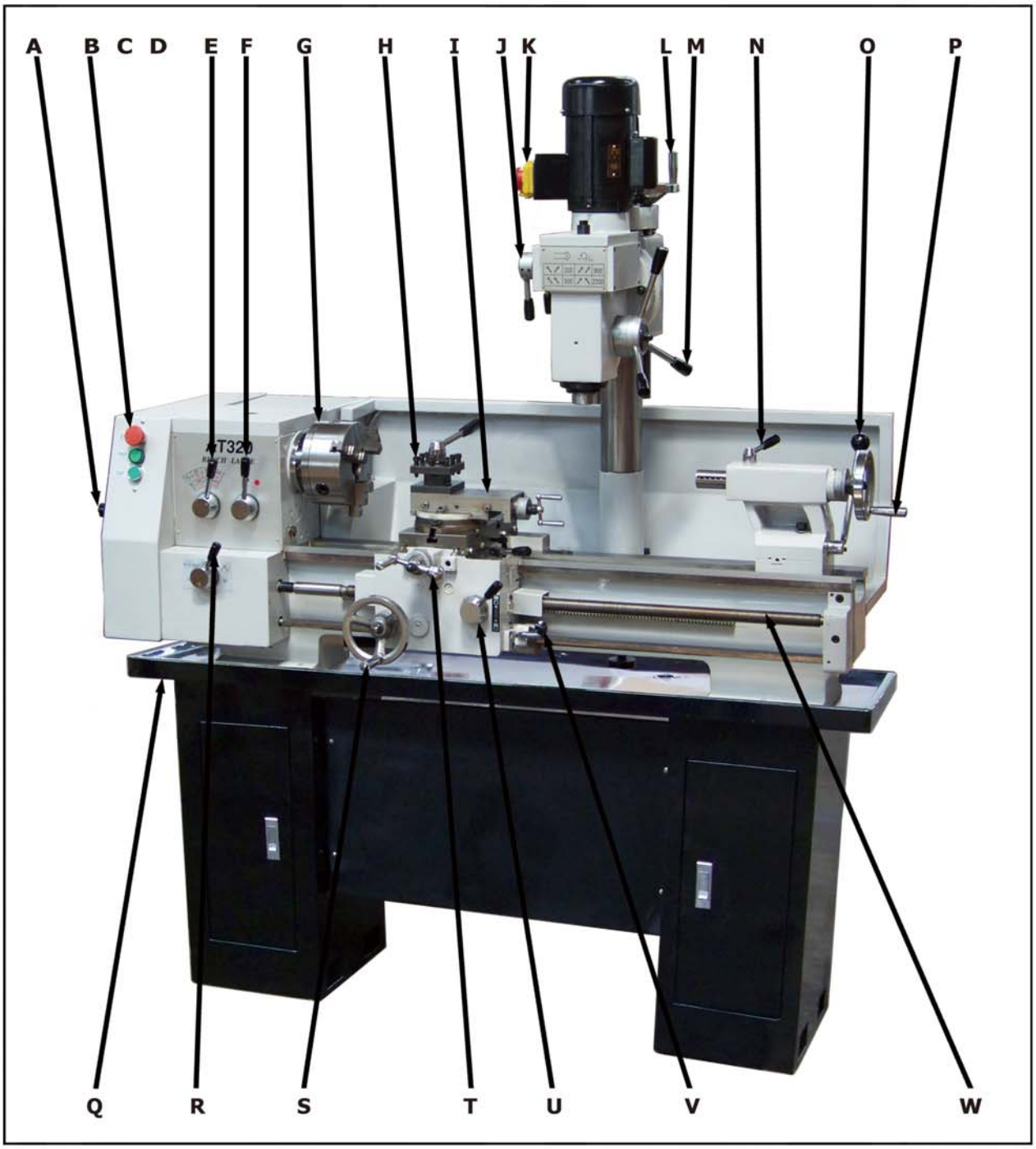

A. Side Cover
B. Lathe Emergency Stop Button
C. Power Lamp
D. Jog Button
E. Spindle Speed Lever
F. Spindle Range Lever
G. 3-Jaw Chuck
H. Four-Way tool Post
I. Compound Rest
J. Milling Speed Levers
K. Mill Power
L. Elevation Handwheel
M. Milling Rack Handles
N. Tailstock Sleeve Lock Lever
O. Tailstock Lock Lever
P. Tailstock Feed Handwheel
Q. Chiip Tray
R. Lead Screw Direction Lever
S. Manual Feed Handwheel
T. Cross Slide Handle
U. Half Nut Lever
V. Spindle ON/OFF Rotation Lever
W. Lead Screw

SECTION 1 : SAFETY

⚠ WARNING !

For you own safety, read instruction manual be for operating this machine.

As with all machinery, there are certain hazards involved with their operation and use. Exercising respect and caution will considerably lessen the risk of personal injury. However, if normal safety precautions are overlooked or ignored, personal injury to the operator or damage to machinery may result.

Safety Precautions

- **Keep balance of the machine when lifting in case of the danger of overturn caused by the unbalanced lifting., Only when the machine is fixed firmly, can you use it, or danger will be resulted from vibration.**
- **Users must check and make sure that the power source is right for the machine before operation and with reliable neutral wire, or the operator will suffer the danger from touching the electricity.**
- **This machine isn't equipped with illuminant apparatus. Users must mount it themselves. The mounted illuminator must not generate too strong light, flash light or shadow.**
- **Do not use the machine in bad surroundings, do not put the machine at damp or wet place or expose it to rain. The working place should be dry. Or the machine will be eroded or suffer from leak of circuit.**
- **Non-operators should keep a safety distance from the working area in case of being hurt by the flying piece.**
- **Operators should wear safety glasses in case of being hurt by the iron piece.**
- **Don't put things is the upper pocket. Don't wear things like necklace .Don't put tools and gauges ready to use in wrong place.**
- **Operators should wear work clothes and not with gloves on. Long hair must be bound up to avoid possible dangers of being wound by the running parts.**
- **Stepping-things for the operator must be able to guard against slide. Operators should keep balance of their bodies and not incline bodies or stretch arms too much.**
- **Do not process work pieces exceeding the designed range with the machine.**
- **Work pieces or cutting tools must be fixed firmly and correctly. Spanners or keys must be removed from chucks or drill chucks after the fixation. Operators should be accustomed to check and ensure that the spanners or keys have been removed already before operation.**
- **When operation users should adopt suitable tools, and work pieces must be fixed firmly and never be touched.**
- **Only when the machine is stopped, can you change cutting tools or maintain it.**
- **Operators can never leave the running machine. Only when the machine is stopped and chucks or drill chucks are thoroughly stopped, can they leave.**
- **If any abnormal noise or any other abnormal situation appears during operation, stop the machine immediately and repair it.**
- **Please guard against any other possible dangers.**

⚠ WARNING !

Additional Safety Rules For This Machine

This machine must not be modified for any purpose other than that for which it designed.

- **You should not operate this machine unless you are thoroughly familiar with metal turning lathes and turning techniques. If there is any doubt whatsoever, you should consult a qualified person.**
- **Do not operate the machine until it is completely assembled, and this entire manual, has been read and understood.**
- **Ensure the proper electrical regulations are followed, and that the machine is properly earthed.**
- **Ensure all chuck keys, spanners and removed from the machine.**
- **Examine the setup carefully, ensuring that nothing could possibly interfere with the rotating workpiece.**
- **Ensure the tool post is secure and cutting tool is adjusted to the correct height.**
- **Ensure your clothing is properly adjusted.**
- **Ensure the workpiece is properly secured.**
- **Make all adjustments with the power off**
- **Always cut at speed for the size and type of material being worked.(refer to a suitable turning manual for cutting speeds.)**
- **When you have finished with machine, always remove and store the cutting tools.**
- **When using a coolant, on no account must suds be allowed to enter the electrical system.**

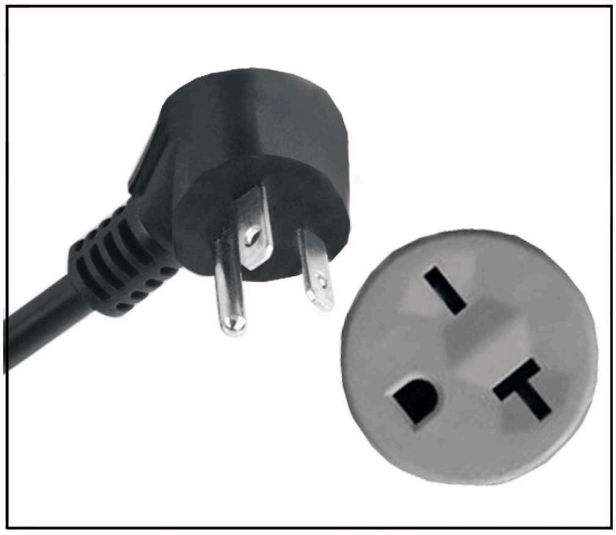

Figure 1. Plug and Receptacle.

Figure 2: Power lamp and emergency stop location.

220v -110v Single -Phase

Amperage

This machine under maximum load.

Both motor operating

220V	7.1Amps
110V	14.3Amps

We recommend connecting your machine to a dedicated and grounded circuit that is rated for the amperage given below. Never replace a circuit breaker on an existing circuit with one of higher amperage without consulting a qualified electrician to ensure compliance with wiring codes.

220V circuit	15 Amps
110V circuit	34 Amps

Plug (fig1)

Grounding

This machine dedicated and grounded circuit that is rated for the amperage given below. Ensure compliance with wiring codes, without consulting a qualified electrician DO NOT replace a circuit breaker on an existing circuit . All electrical connections must be made in accordance with local codes and ordinances. All electrical connections must be properly installed and grounded.

In the event of an electrical short, grounding reduces the risk of electric shock.

Extension

Do not use of extension cords. and arrange properly the placement and install wiring to avoid extension.

If this is very absolutely necessary which use an extension cord at 220v with machine;

The cord is at least a 12 gauge that is no exceed 50 feet, which must contain a ground wire and plug pin.

A qualified electrician must size cords over 50 feet long to prevent motor damage.

Glossary of Terms

The following is a list of common definitions, terms and phrases used throughout this manual as they relate to this lathe/mill and metalworking in general. Become familiar with these terms for assembling, adjusting or operating this machine. Your safety is VERY important to us at Bolton Hardware!

Arbor: A machine shaft that supports a cutting tool.

Backlash: Wear in a screw or gear mechanism that may result in slippage, vibration, and loss of tolerance.

Collet: A conical shaped split-sleeve bushing which holds round or rectangular tool and/or work pieces by their outside diameter.

Cross Slide: A fixture attached to the lathe carriage that holds the compound rest and can be moved in and out.

Cutting Speed: The distance a point on a cutter moves in one minute, expressed in meters or feet per minute.

Dial Indicator: An instrument used in setup and inspection work that shows on a dial the amount of error in size or alignment of a part.

Dividing Head: A milling machine accessory used to divide a circular object into a number of equal parts.

Down Milling or Climb Milling: Feeding the workpiece in the same direction as the cutter rotation.

End Mill: A cutter with cutting surfaces on both its circumference and end.

Facing: In lathe work, cutting across the end of a workpiece, usually to machine a flat surface.

Feed: The movement of a cutting tool into a workpiece.

Fixture: A device that securely holds the workpiece in place during cutting operation as opposed to a Jig which is used to hold and guide a workpiece through an operation.

Gib: A tapered wedge located along a sliding Member to take up wear or to ensure a properfit.

Headstock: The major lathe component that houses the spindle and motor drive system to turn the workpiece.

Lathe Center: A lathe accessory with a 60° Point which is inserted into the headstock or tailstock of the lathe and is used to support the workpiece.

Leadscrew: Lathe—The long screw that is driven by the end gears and supplies power to the carriage. Mill—The screws that move the table in longitudinal, transverse, or vertical directions.

Spindle: The revolving shaft that holds and drives the workpiece or cutting tool.

Tailstock: A moveable fixture opposite of the headstock on a lathe that has a spindle used to support one end of a workpiece and for holding tools.

Tool Post: The part of the compound rest that holds the tool holder.

Turret: Lathe—A machine fixture that holds multiple tools and can be revolved and indexed to position. Mill—The part of a mill which rotates on the column and can be set to a specific degree.

Ways: The precision machined and flat tracks on a lathe or mill on which the carriage, tailstock, and the mill table and knee slide.

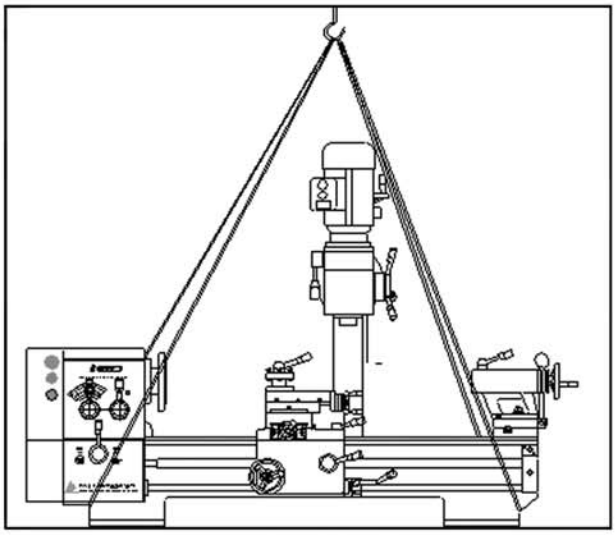

Figure 3. Lifting strap locations.

It is recommended to use the lifting method in **figure 3.** If a forklift is available, it can also be used to lift the machine. When the machine is lifted and installed, you should make it level in case of turnover causing possible danger. The drilling and milling head can't be turned at 180° in case of losing balance.

Please assembly referring to figure Use to level the guide way and the small slide. Fix the machine in the base with bolts.

Prepare the machine location, and install or prepare holes for any floor mounting fasteners.

Use fork lift or 2-ton hoist to operator or 1ton lifting straps and hooks.

Unbolt the crate sides and remove the top and side.

Insert two lifting straps under the bedways and behind the feed rod and the lead screw as shown in fig to balance the load.

Unbolt the machine from the pallet.

Slowly raise the machine off the pallet and carefully move the machine to prepare location.

With the machine securely resting on the floor, shim between the floor and cabinet base as required to make the ways level at four corner locations as indicated with a machinst's level.

Secure the machine to the floor, but do not over tighten the fasteners.

Recheck the ways to make sure the ways are still level, and re-shim as required.

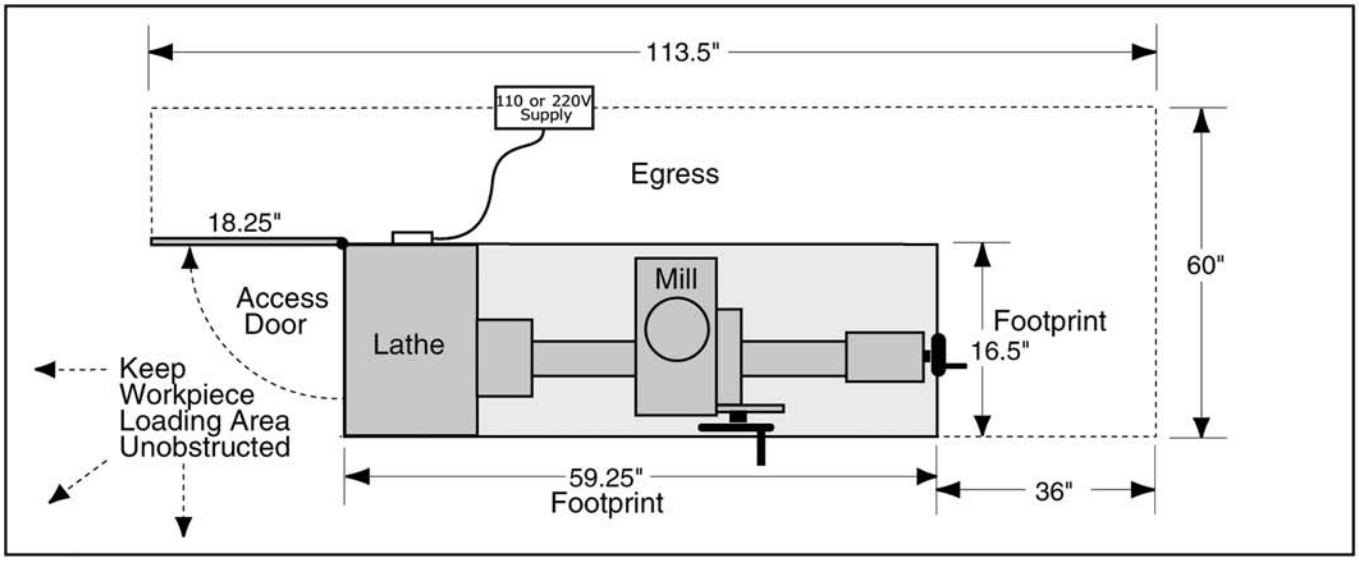

Figure 4: Minimum wall clearances.

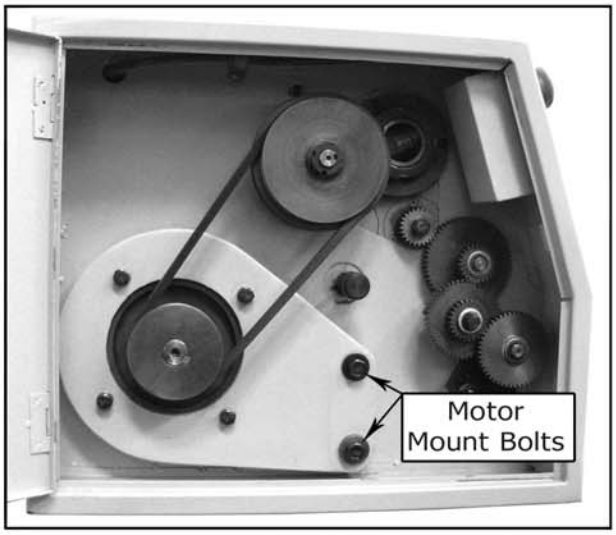

Figure 5. Cutting speed table for HSS cutting tools.

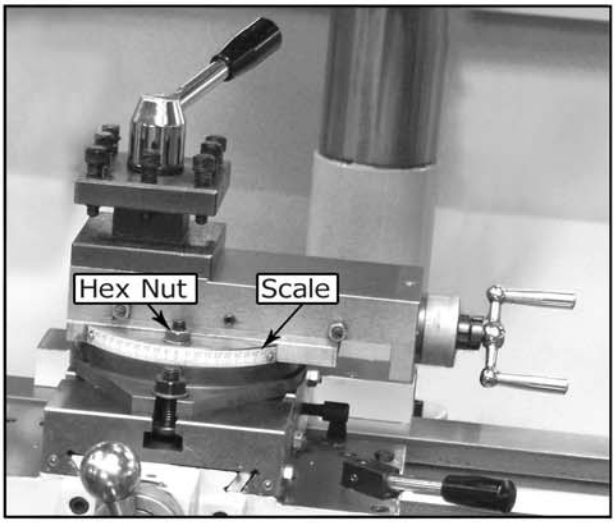

Figure 6: Compound rest, scale, and handwheel.

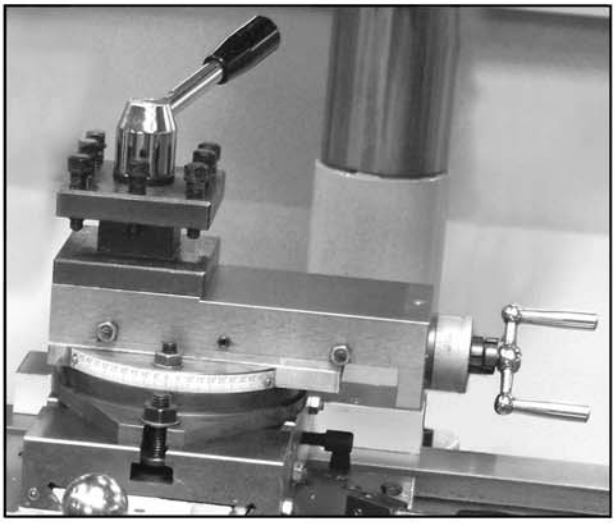

Figure 7: Four-Way Tool Posr

Belt Adjustment or Replacement

DISCONNECT POWER TO THE LATHE/MILL!

1. Open the change gear door(FIGURE5)
2. Using a 17mm wrench, loosen the two motor ount bolts shown in Figure 5.
3. Grasp the motor and lift upward to de-tension the belt and remove the belt.
4. Use solvent to clean the pulleys of oil and install the new belt.
5. the table shows the various combinations of belt setting(letters and numbers)to achieve the desired speed.
6. let the motor hang to tension the belt, and tighten the two motor mount bolts.
7. close the door and latch it shut.

Using the Compound Rest and the Tool post

The compound rest is used to cut tapers on parts or to set the proper infeed angle when threading. It may also be used to cut specific lengths longitudinally, when set parallel to the spindle axis.

To set the angular position:

1. Loosen the hex nuts, one on each side of the compound rest (see Figure 6).
2. Rotate the compound rest to the desired angular position using the scale.
3. Tighten the two hex nuts. Be sure to not overtighten, as you may strip threads or crack or distort the base casting.

use the tool post

This tool post (figure7) is mount on top of the compound rest , and maximum four tool to be loaded.

a. when change the positions of the tool post ,first rotate the top of handle counterclockwise ,this tool post began lossed, rotate it 90° counter-clockwise, and then clockwise rotate the tool post to the desired position, rotate clockwise the handle to lock the tool into position.

b. When rotated the tool post handle by hand and slide the compound rest , must be lossed and adjust lock screw. when machine operating ,must lock the screw of compound rest.

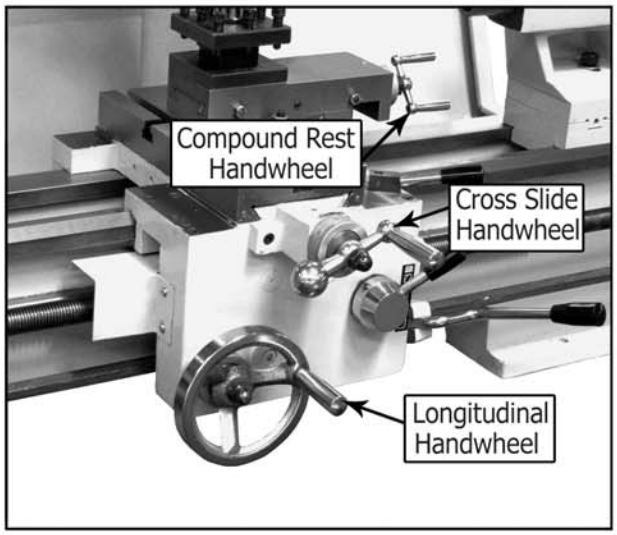

Figure 8 . Carriage controlss.

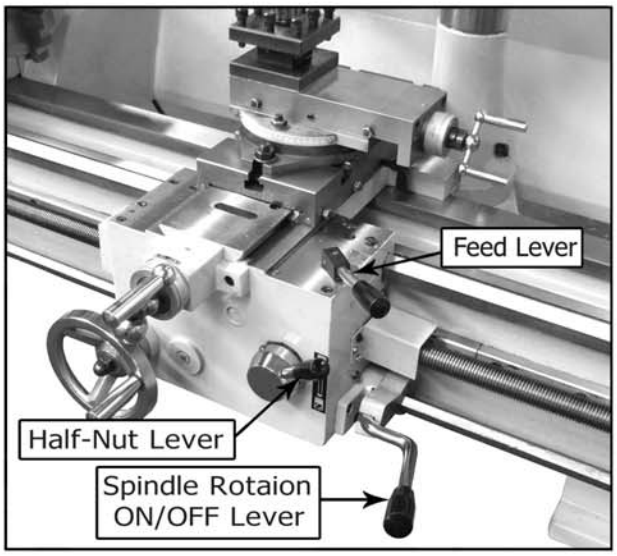

Figure 9: Compound rest, scale, and handwheel.

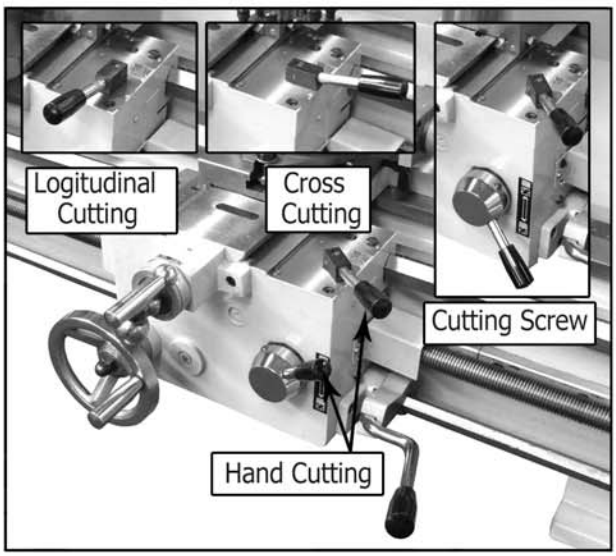

Figure 10 . Position of the Lever.

Using the Manual Feed Hanwheel

Notice: when using manual feed handwheel, the longitudinal and cross slide lever must be at the neutral of the position and the half is loosed.

There are three handwheels by use for you can manually move the cutting tool around the lathe /mill.(Figure8)

Longitudinal Handwheel

When move the carriage left or right along the bed, You can use the longitudinal handwheel, This control is helpful when setting up the machine for turning or when manual movement is desired during turning operations.

Cross slide Handwheel

Turning the cross slide handwheel clockwise move the top of slide toward the workpiece, turning the dial counterclockwise move the slide away from the work.

Compound Rest Handwheel

The compound rest handwheel mainly controls the position of the cutting tool relative to the workpiece, turning the dial move the tool post toward or away from the spindle, Adjust angle is depend on the two hex nuts on the base of the compound rest.

use power feed handles

this machine power feed control by two handle longitudinal and cross slide lever and half nut (figure9, 10)

1. longitudinal and cross slide lever: this position is right top of the compound rest, the half nut is in lossed before use. And by which could power feed cutting surface, hole ,face .

   when longitudinal and cross slide lever in the 45° position, counter clockwise rotated 45°, for cross power feed, clockwise rotated 45° for longitudinal. before use the longitudinal and cross slide lever must be in the 45° position, and by which could cut screw.

   When longitudinal and cross slide lever in the 45° position, drop down the half nut to cutting screw.

2. half nut handle, :this position in the right of the apron.

use the tailstock

the tailstock can be used to support workpieces with the use of a live or dead center. the lathe can drill l or bore holes in the center of parts if use an MT3# or a drill bit on which the tailstock, can also be offset for cutting shallow tapers. it could be manual locked on the any position of the guild way .

Lock position: first adjust the two nuts (figure11), make the two press plant of tailstock and bed can be meet to saitified push tailstock by hand(gib is 0.5mm),rotate the lock sleeve(the two press plant is tiged each other), tailstock have been locked on the guildway of the bed. if tailstock must support more effort, turn tigted the nut on the top of bolt. by use wrench.

Tailstock slide: rotate lock sleeve to loose the press plant and top nut, the tailstock can be slide by hand.

Use tailstock center sleeve.

when need to move the center sleeve, Slide the tailstock to the desired positions and locked, push down counterclockwise the quill lock lever to unlock, turn the quill feed handle(wheel) to move the quill towards the spindle ,or counterclockwise to move away from the spindle. turn clockwise the quill lever to lock the center sleeve in place.

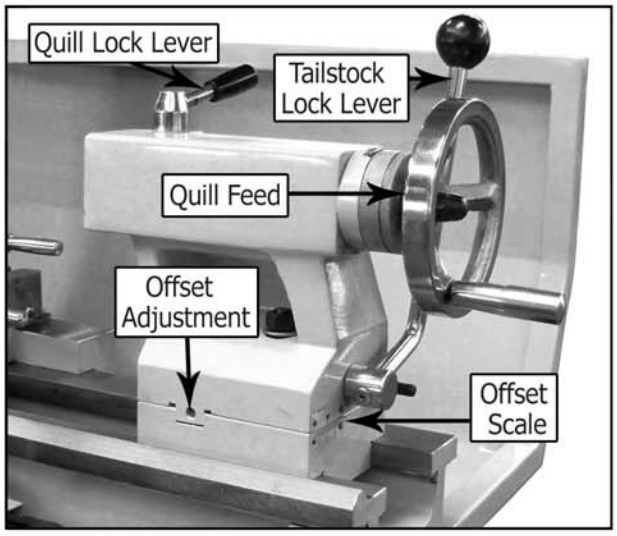

Figure 11 . Tailstock and quill lock handles in locked position.

Drilling with the Tailstock

To install the MT#3 drill chuck:

1. With the tailstock locked, unlock the quill lock lever.
2. Turn the quill feed handle clockwise to extend the quill about one inch.
3. Insert the MT#3 chuck (Figure 12) or an MT#3 tapered drill shank into the quill until the taper is firmly seated.
4. Turn the quill feed handle clockwise to feed the drill bit into a rotating workpiece.
5. To remove the chuck taper, turn the quill feed handle counterclockwise until the chuck is pushed out of the tailstock taper.

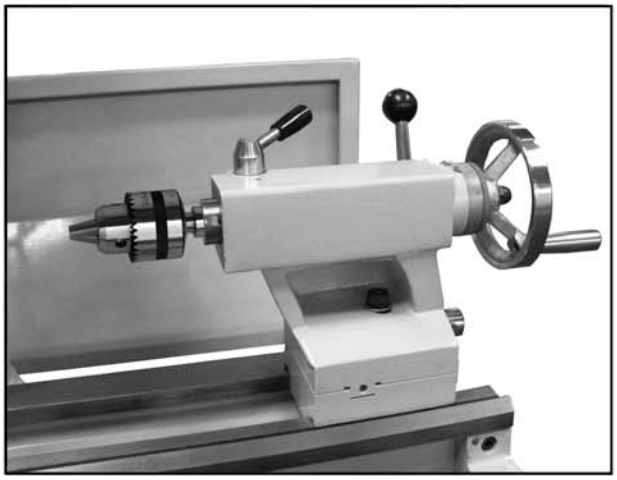

Figure 12: Setting up tailstock for drilling.

Cutting Speeds for High Speed Steel (HSS) Cutting Tools	
Workpiece Material	Cutting Speed (sfm)
Aluminum & alloys	300
Brass & Bronze	150
Copper	100
Cast Iron, soft	80
Cast Iron, hard	50
Mild Steel	90
Cast Steel	80
Alloy Steel, hard	40
Tool Steel	50
Stainless Steel	60
Titanium	50
Plastics	300-800
Wood	300-500

Note: *For carbide cutting tools, double the cutting speed. These values are a guide-line only.* Refer to the *MACHINERY'S HANDBOOK* for more detailed information.

Figure 13. Cutting speed table for HSS cutting tools.

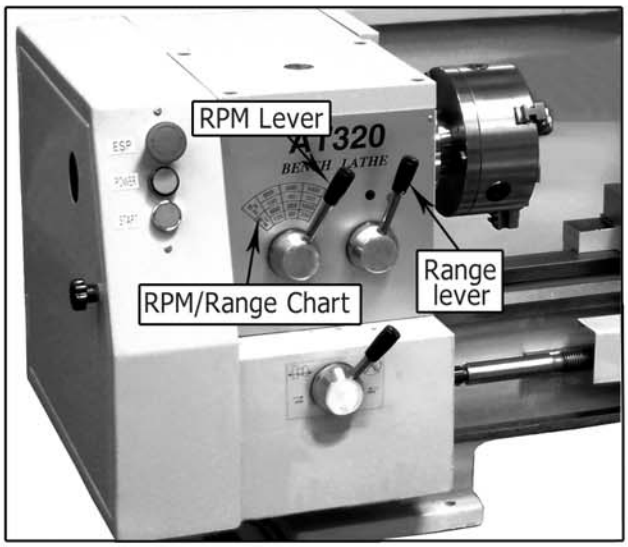

Figure 14: Spindle speed selector levers.

WARNING!

Failure to follow RPM and feed rate guidelines may threaten operator safety from ejected parts or broken tools.

Setting the Spindle RPM

To determine and set the needed spindle **RPM** for cutting:

1. Use the table in Figure 13 to determine the cutting speed required for the workpiece material.
2. Determine the average final diameter of the workpiece in inches, for the cut to be made.
3. Now use the following formula to determine the closest RPM for the cutting operation:

$$\frac{\textbf{(Cutting Speed x 4)}}{\textbf{Diameter of Cut}} = \textbf{RPM}$$

4. With the calculated RPM, decide on the closest cutting RPM to what you need.
5. Make sure the spindle is completely stopped before proceeding.
6. Move the levers (Figure 32) to get the RPM range that is closest to your calculated RPM:

   — The range lever selects BLACK DOT = High or RED DOT = Low.

   — The RPM Lever selects the RPM within that range.

DISCONNECT POWER TO THE LATHE/MILL !

Your machie installed belt by two groove of pulley, there is high speed and low range, the yellow for high speed range, the red for low speed range.(figure14)

Setting high speed rang: mount the end of belt on the major diameter of motor pulley and the other end on the minor diameter of spindle pulley, and then move the levers to get the yellow rpm rang that is you need speed.

Setting low speed rang: mount the end of belt on the minor diameter of motor pulley and the other end on the major diameter of spindle pulley, and then move the levers to get the red rpm rang that is you need speed .

Note: *You may need to rotate the chuck by hand to get the gears to engage.*

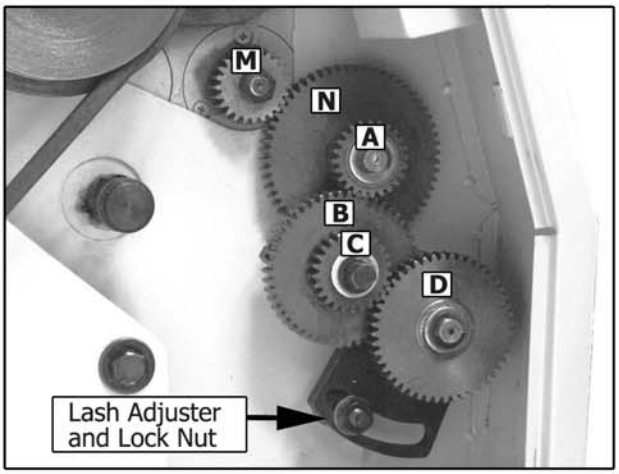

Figure 15. Change gear locations

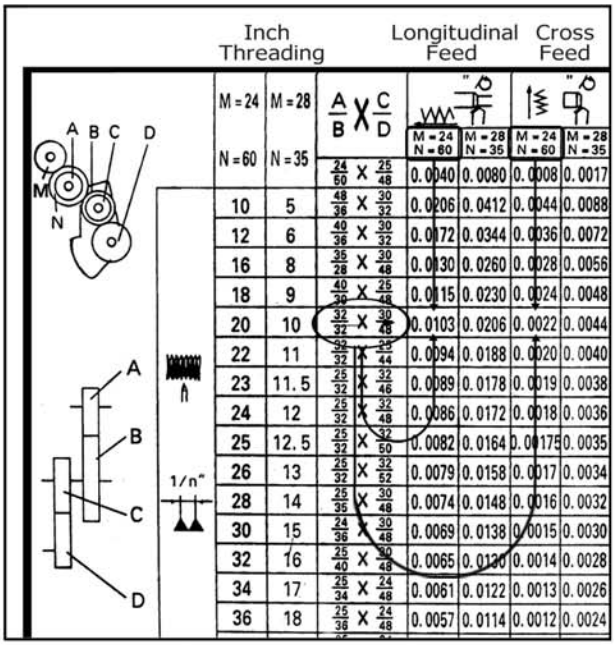

Inch Threading M=24 N=60	Inch Threading M=28 N=35	A/B X C/D	Longitudinal Feed M=24 N=60	Longitudinal Feed M=28 N=35	Cross Feed M=24 N=60	Cross Feed M=28 N=35
		24/60 X 25/48	0.0040	0.0080	0.0008	0.0017
10	5	48/36 X 30/32	0.0206	0.0412	0.0044	0.0088
12	6	40/36 X 30/32	0.0172	0.0344	0.0036	0.0072
16	8	35/28 X 30/48	0.0130	0.0260	0.0028	0.0056
18	9	40/36 X 25/48	0.0115	0.0230	0.0024	0.0048
20	10	32/32 X 30/48	0.0103	0.0206	0.0022	0.0044
22	11	32/32 X 25/44	0.0094	0.0188	0.0020	0.0040
23	11.5	25/32 X 32/46	0.0089	0.0178	0.0019	0.0038
24	12	25/32 X 32/48	0.0086	0.0172	0.0018	0.0036
25	12.5	25/32 X 32/50	0.0082	0.0164	0.0175	0.0035
26	13	25/32 X 32/52	0.0079	0.0158	0.0017	0.0034
28	14	25/35 X 30/48	0.0074	0.0148	0.0016	0.0032
30	15	24/36 X 30/48	0.0069	0.0138	0.0015	0.0030
32	16	25/40 X 30/48	0.0065	0.0130	0.0014	0.0028
34	17	25/34 X 24/48	0.0061	0.0122	0.0013	0.0026
36	18	25/36 X 24/48	0.0057	0.0114	0.0012	0.0024

Figure 16. Using the change gear chart.

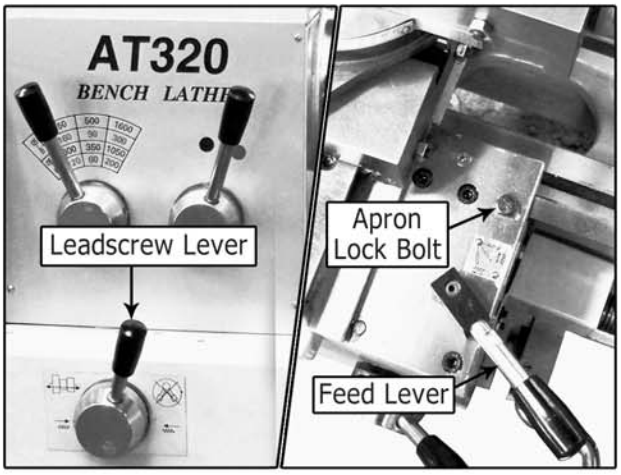

Figure 17. Leadscrew and feed levers.

Setting the Power Feed Rate

DISCONNECT POWER TO THE LATHE/MILL !

To set and engage the power feed

Refer to the CHANGE GEAR LIST on page15. to Setting parameters of feed rate and thread by combinate gear. There are six gears in every group, the code is M,N,A,B,C,D., Figure for the gear installations locations that are refenced by the list. The up column of the list show FAQ feed rate, to be Suitable for cutting surface ,hole, end face.

1. If give the longitudinal and cross rate how to combinate gear, please see Figure16. For example: the list shows that 0.0103" of longitudinal travel per revolution of lead screw is need, or 0.0022" of cross travel per revolution of lead screw is need.

   Fist loosen the gear plate and swing the assembly out of the way ,remove the required E-rings and swap out the appropriate change gears, install M,N,A gear side by side ,and then install B,C on the gear plant and mount the gear plant on the shaft of the left trestle, install gear D and adjust the gib with C and D, Move the gear plant and adjust gib of B with A gear. when finished and then tighten the lock nut. use the leadscrew lever to select leadscrew rotation direction, loosen the apron lock bolt, and use feed lever to engage the cross slide or longi tudinal feed(see Fig.15,17).

Note: *All chainge gears are stamped with the number of teeth they have.*

NOTICE

Feed rate is based on spindle RPM. Pay close attention to the feed rate you have chosen and be ready to disengage the apron. Failure to do this may cause the carriage to crash into the chuck.

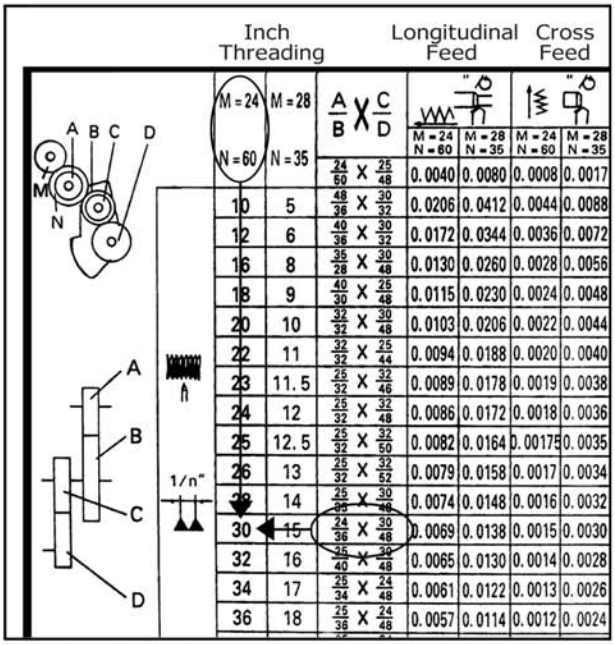

Inch Threading			Longitudinal Feed		Cross Feed	
M = 24 N = 60	M = 28 N = 35	A/B X C/D	M = 24 N = 60	M = 28 N = 35	M = 24 N = 60	M = 28 N = 35
		24/60 X 25/48	0.0040	0.0080	0.0008	0.0017
10	5	48/36 X 30/32	0.0206	0.0412	0.0044	0.0088
12	6	40/36 X 30/32	0.0172	0.0344	0.0036	0.0072
16	8	35/28 X 30/48	0.0130	0.0260	0.0028	0.0056
18	9	40/30 X 25/48	0.0115	0.0230	0.0024	0.0048
20	10	32/32 X 30/48	0.0103	0.0206	0.0022	0.0044
22	11	32/32 X 25/44	0.0094	0.0188	0.0020	0.0040
23	11.5	25/32 X 32/46	0.0089	0.0178	0.0019	0.0038
24	12	25/32 X 32/48	0.0086	0.0172	0.0018	0.0036
25	12.5	25/32 X 32/50	0.0082	0.0164	0.00175	0.0035
26	13	25/32 X 32/52	0.0079	0.0158	0.0017	0.0034
28	14	25/35 X 30/48	0.0074	0.0148	0.0016	0.0032
30	15	24/36 X 30/48	0.0069	0.0138	0.0015	0.0030
32	16	25/40 X 30/48	0.0065	0.0130	0.0014	0.0028
34	17	25/34 X 24/48	0.0061	0.0122	0.0013	0.0026
36	18	25/36 X 24/48	0.0057	0.0114	0.0012	0.0024

Figure 18: Using the change gear chart.

THREAD DIAL TABLE
LEAD SCREW PITCH 5 T.P.I.

T.P.I.	DIAL	T.P.I.	DIAL
5	1-6	18	1 or 2
6	1 or 2	20	
7	1	22	1 or 2
8	1	23	1
9	1	24	1 or 2
10	1-6	25	1-6
11	1	26	1 or 2
11.5		28	1 or 2
12	1 or 2	30	1-6
12.5		32	1 or 2
13	1	34	1 or 2
14	1 or 2	36	1 or 2
15	1-6	40	1-6
16	1 or 2	48	1 or 2
17	1		

Figure 19: Thread dial table.

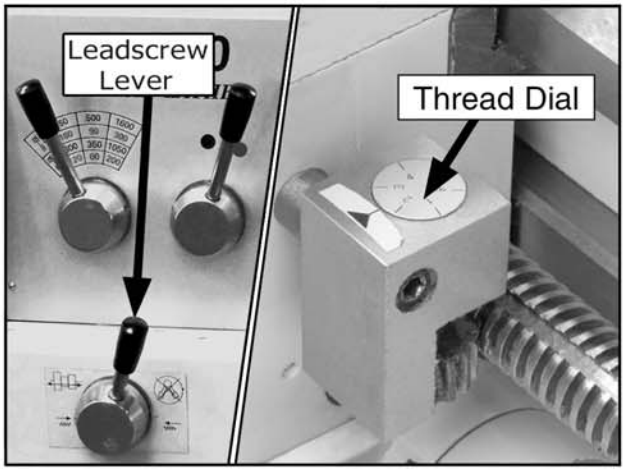

Figure 20: Threading controls.

Setup for Threading

Your lathe is capable of cutting inch and metric threads.

To setup for threading:

DISCONNECT THE LATHE/MILL FROM POWER!

Refer to the CHANGE GEAR LIST on page15. to Setting parameters of thread by combinate gear.

2. If achieve your need threading how to com binate gear, please see Figure 18 .

   For example: the list shows 30TPI is need.

   Fist loosen the gear plate and swing the assembly out of the way, remove the required E-rings and swap out the appropriate change gears, install M,N,A gear side by side ,and then install B,C on the gear plant and mount the gear plant on the shaft of the left trestle, install gear D and adjust the gib with C and D, Move the gear plant and adjust gib of B with A gear. when finished and then tighten the lock nut. use the leadscrew lever to select leadscrew direction, setup the cutting, compound rest and cross slide to cut your threads and loosen the apron lock bolt.

   While threading, keep your hand on the half-nut lever, ready to disengage the apron to avoid any potential for an apron/chuck crash.

   — If cutting inch threads, refer to the Thread Dial Table in Figure 38 to use the thread dial.

   — If cutting metric threads, do not use the thread dial. Instead, you must leave the half nut engaged until the threading operation is totally complete.

Note: *All change gears are stamped with the number of teeth they have.*

Change Gear Chart

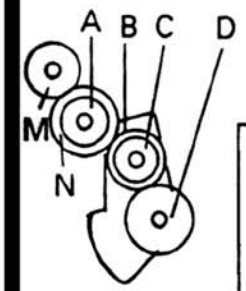

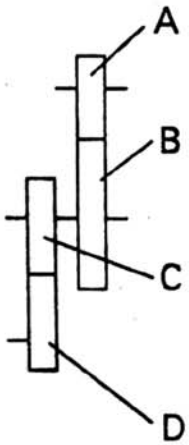

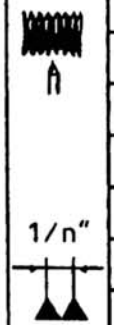

M = 24 N = 60	M = 28 N = 35	A/B X C/D	" M = 24 N = 60	" M = 28 N = 35	" M = 24 N = 60	" M = 28 N = 35
		24/50 X 25/48	0.0040	0.0080	0.0008	0.0017
10	5	48/36 X 30/32	0.0206	0.0412	0.0044	0.0088
12	6	40/36 X 30/32	0.0172	0.0344	0.0036	0.0072
16	8	35/28 X 30/48	0.0130	0.0260	0.0028	0.0056
18	9	40/30 X 25/48	0.0115	0.0230	0.0024	0.0048
20	10	32/32 X 30/48	0.0103	0.0206	0.0022	0.0044
22	11	32/32 X 25/44	0.0094	0.0188	0.0020	0.0040
23	11.5	25/32 X 32/46	0.0089	0.0178	0.0019	0.0038
24	12	25/32 X 32/48	0.0086	0.0172	0.0018	0.0036
25	12.5	25/32 X 32/50	0.0082	0.0164	0.00175	0.0035
26	13	25/32 X 32/52	0.0079	0.0158	0.0017	0.0034
28	14	25/35 X 30/48	0.0074	0.0148	0.0016	0.0032
30	15	24/36 X 30/48	0.0069	0.0138	0.0015	0.0030
32	16	25/40 X 30/48	0.0065	0.0130	0.0014	0.0028
34	17	25/34 X 24/48	0.0061	0.0122	0.0013	0.0026
36	18	25/36 X 24/48	0.0057	0.0114	0.0012	0.0024
40	20	25/40 X 24/48	0.0052	0.0104	0.0011	0.0022
48	24	25/48 X 25/50	0.0043	0.0086	0.0009	0.0018

M = 24 N = 60	M = 28 N = 35	A/B X C/D	mm M = 24 N = 60	mm M = 28 N = 35	mm M = 24 N = 60	mm M = 28 N = 35
		24/50 X 25/48	0.100	0.200	0.020	0.040
3	6	42/32 X 36/32	0.618	1.236	0.131	0.262
2.75	5.5	42/32 X 36/35	0.565	1.130	0.120	0.240
2.5	5	48/35 X 27/30	0.520	1.040	0.110	0.220
2.25	4.5	32/28 X 34/35	0.465	0.930	0.098	0.196
2	4	36/32 X 35/40	0.412	0.824	0.087	0.175
1.75	3.5	36/32 X 32/42	0.360	0.720	0.076	0.152
1.5	3	35/36 X 32/42	0.310	0.620	0.066	0.132
1.25	2.5	28/35 X 34/44	0.260	0.520	0.055	0.110
1	2	28/32 X 27/48	0.200	0.400	0.044	0.088
	1.75	25/36 X 30/48	0.182	0.364	0.038	0.076
0.8		25/40 X 30/48	0.164	0.328	0.035	0.070
0.75	1.5	25/34 X 24/48	0.154	0.308	0.032	0.064
0.7		25/42 X 28/48	0.145	0.290	0.030	0.060
0.6		24/46 X 28/50	0.122	0.245	0.026	0.052
0.5	1	24/50 X 27/52	0.105	0.210	0.022	0.044
0.45		24/50 X 24/52	0.093	0.186	0.019	0.038

Using the Steady Rest

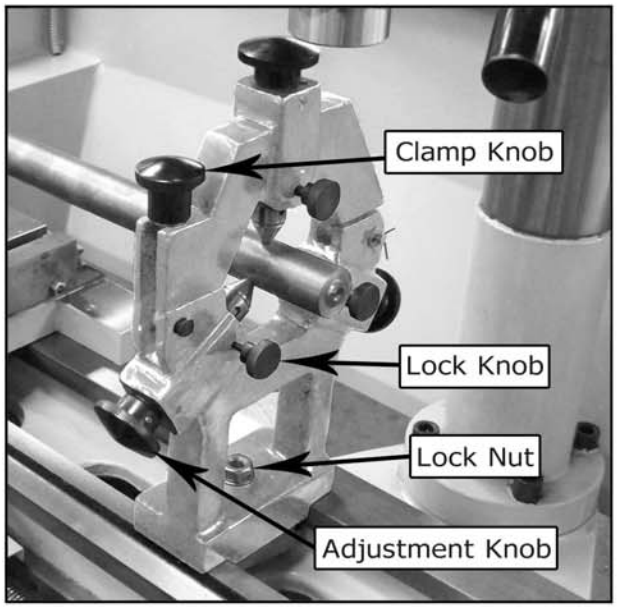

Figure 21: Steady rest adujusments.

The steady rest serves as a support for long shafts. The steady rest can be placed anywhere along the length of the ways.

To use the steady rest:

1. Carefully place the steady rest on the lathe bedways.
2. Loosen the lock knobs so the finger position can be adjusted (see Figure 21).
3. Loosen the clamp knob (see Figure 21) and open the steady rest so a workpiece can fit inside of the fingers.
4. Position the steady rest where desired. Tighten the lock nut (see Figure 21) at the base of the steady rest to secure in place.
5. Close the steady rest so that the workpiece is inside the fingers and tighten the clamp knob.
6. Turn the adjustment knobs so the fingers are snug against the workpiece and then tighten the lock knobs. Lubricate the finger tips with an anti-seize lubricant during operation.
7. After prolonged use, the fingers will show wear. Either mill or file the tips for a new contact surface.

Using the Follow Rest

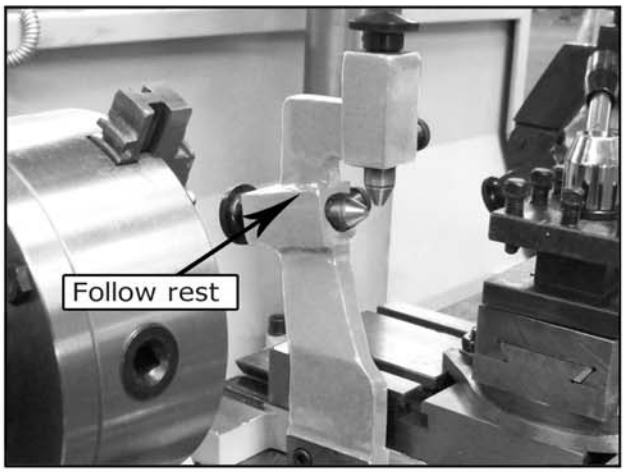

Figure 22: Follow rest attachment.

The follow rest in Figure 22 is mounted on the saddle and follows the movement of the tool. The follow rest requires only two fingers, as the cutting tool acts as the third. The follow rest is used on long, slender parts to prevent flexing of the workpiece from the pressure of the cutting tool.

The sliding fingers are set similar to those of the steady rest—free of play but not binding. Always lubricate during operation. After prolonged use, the fingers will need to be milled or filed to clean up the contact surface.

Using the Centers

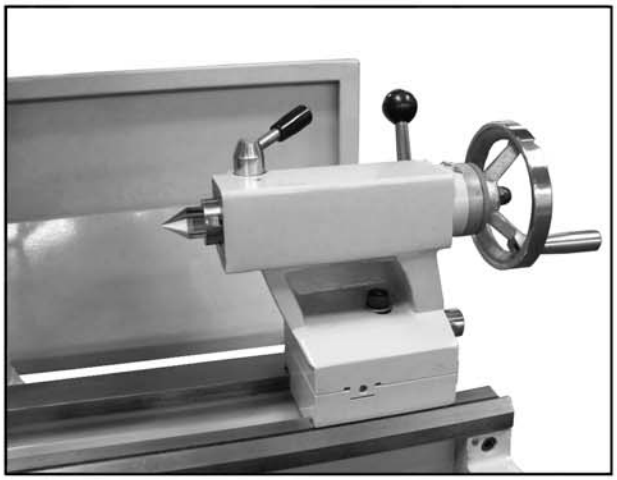

Figure 23: Inserting dead center.

The dead center is used in the tailstock and lathe spindle to support workpieces. When used in the tailstock, make sure to keep the MT#3 dead center tip and workpiece lubricated to prevent tip galling.

This lathe/mill is also supplied with an MT#5 dead center that fits into the lathe spindle taper.

To install a dead or live center:

1. Feed the quill out about 1" and insert the MT#3 dead center (Figure 23). The mating tapers provide the locking action.
2. Move the tailstock into position and lock in place.
3. Feed the quill into the workpiece.

   Note: *Make sure there is a center drilled hole in the end of the workpiece for the dead center.*

4. Lock the quill into place once the live center and the part rotate together. The quill may need to be adjusted during operation.
5. To remove the dead center, retract the quill until the dead center pops free.

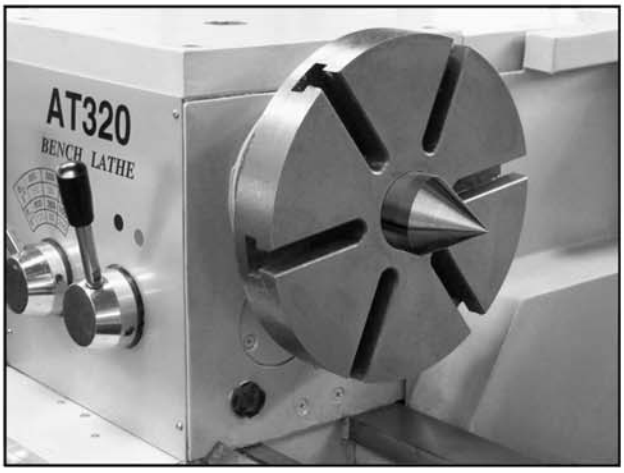

Figure 24: Faceplate and dead center setup.

To install the MT#5 dead center in the spindle:

1. DISCONNECT POWER TO THE LATHE/ MILL!

2. Remove the chuck from the spindle.

3. Install the MT#5 dead center in the spindle.

4. Attach the faceplate to the spindle, see Figure 24.

   Note: *When using the dead center in the spindle, use a lathe dog so that your part will rotate with the spindle and not spin on the dead center tip.*

NOTICE

Failure to keep dead center point well lubricated will gall the dead center and workpiece.

Mounting the Chuck and the Faceplate

Figure 25: Chuck mounting components.

The three-jaw scroll chuck has hardened steel jaws that self-center the workpiece within 0.002"-0.003". An extra set of jaws is included for machining larger workpieces.

The four-jaw chuck also has hardened steel jaws but are adjusted independently to hold an offcenter workpiece. Each jaw can be removed from the chuck body and reversed for special clamping applications.

The cast-iron faceplate has slots for T-bolts that hold clamping fixtures. This face plate and aftermarket clamping hardware will hold non-cylindrical parts such as castings for many types of turning operations.

Both chucks and the faceplate are removed and installed the same way.

To remove and install the chuck or face late:

1. DISCONNECT POWER TO THE LATHE/MILL!
2. Lay a chuck cradle or protective layer of plywood ver the bedways to prevent your fingers from being pinched and to protect the precision-ground surfaces (see Figure 26).
3. Use a 14mm wrench and loosen the three hex bolts that secure the chuck to the spindle Figure 25.
4. Support the chuck, and while anticipating the heavy weight of the chuck, remove the three hex bolts and then the chuck.
5. Clean the mating surfaces of the spindle and the new chuck or faceplate with a clean oiled rag.
6. Position the other chuck or faceplate on the spindle flange, making sure it is fully seated, and tighten the hex bolts in several alternating sequences.

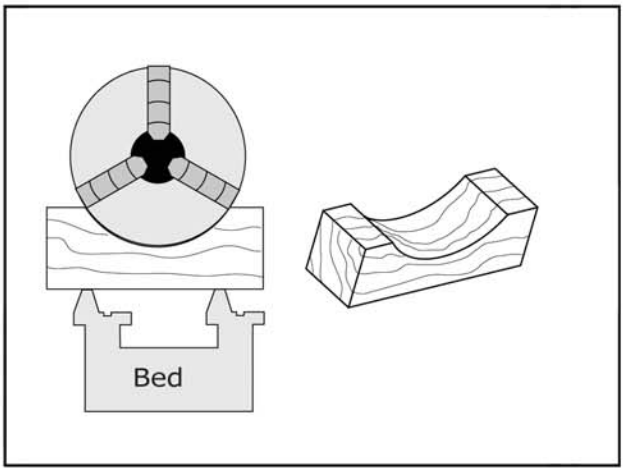

Figure 26: Faceplate and dead center setup.

WARNING!

Securely clamp your workpiece and remove the chuck key! Thrown objects from a lathe/mill can cause serious injury or death to the operator and to bystanders many feet away.

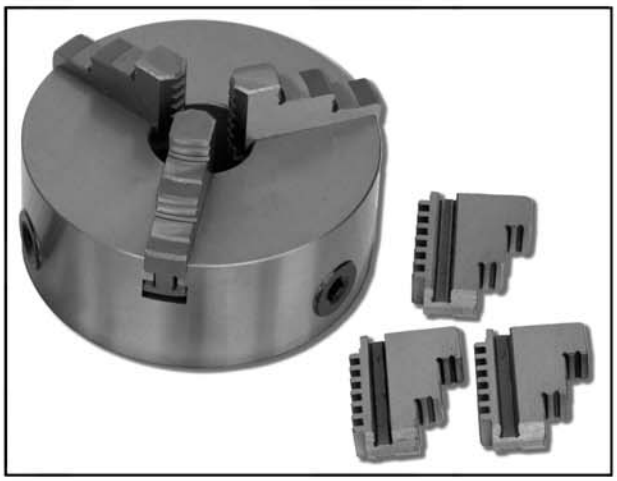

Figure 27: Chuck and jaw selection.

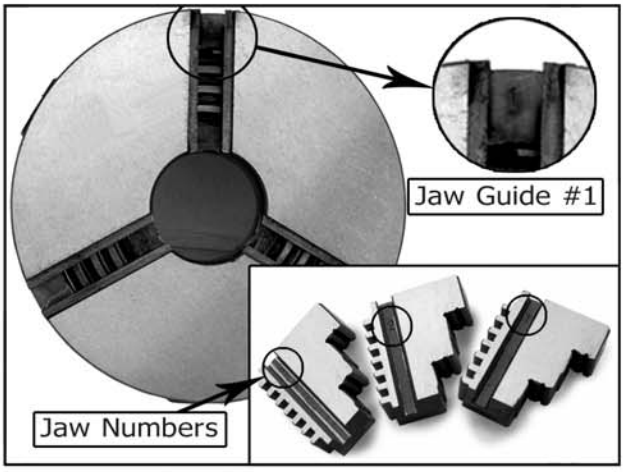

Figure 28: Faceplate and dead center setup.

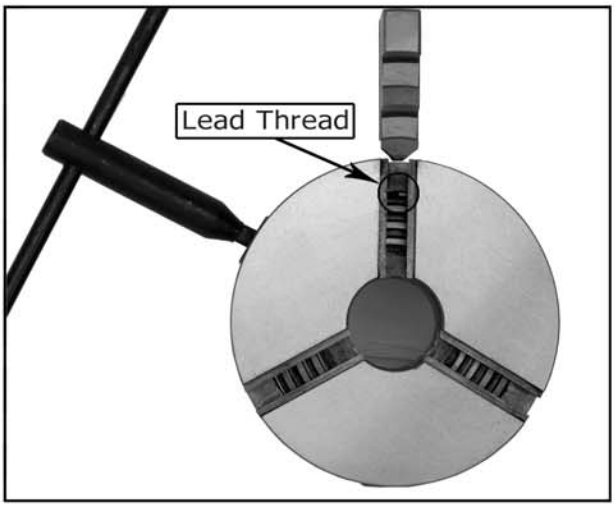

Figure 29: Jaw guide number.

Replacing the Jaws

The three-jaw scroll chuck has removable hardened steel jaws (Figure 27). The outside of the jaws are used to hold the workpiece from the outer diameter.

Numbered from 1–3, the jaws must be used in the matching numbered jaw guides, see Figure 28.

To remove a set of jaws:

1. DISCONNECT POWER TO THE LATHE/MILL!
2. Place a piece of wood over the ways to protect them from potential damage.
3. Turn the chuck key counterclockwise and back the jaws out.
4. Clean the jaw mating surfaces and apply a film of white lithium grease to the mating surfaces.
5. Set the old jaws aside in a safe place free of moisture and abrasives.
6. Rotate the chuck key clockwise until you see the tip of the scroll-gear lead thread just begin to enter jaw guide #1 (see Figure 29).
7. Insert jaw #1 into jaw guide #1 and hold the jaw against the scroll gear.
8. Rotate the chuck key clockwise one turn to engage the tip of the scroll-gear lead thread into the jaw. Pull on the jaw now and it should be locked into the jaw guide.
9. Repeat the steps on the remaining jaws.

   — If installed correctly, the three jaws will converge together at the center of the chuck.

   — If the jaws do not come together, repeat this procedure until they do.

Note: *The chuck need not be removed from the spindle to swap the jaws.*

Using the Four-Jaw Chuck

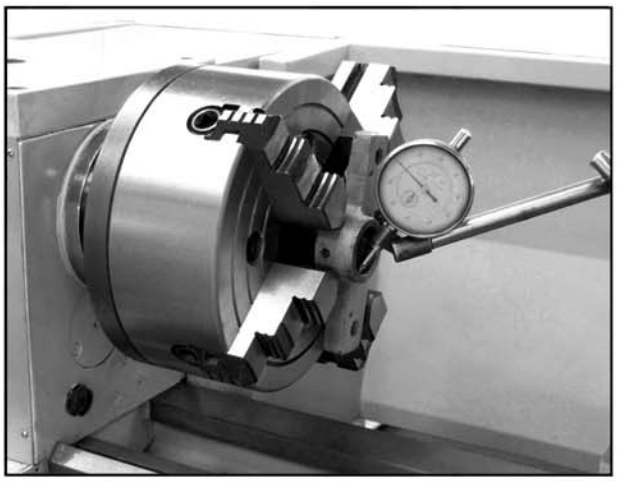

Figure 30: Centering workpiece.

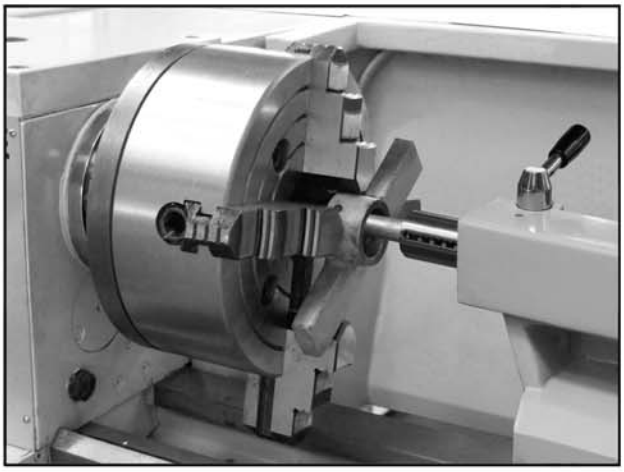

Figure 31: Clamping workpiece.

To install the four-jaw chuck:

Refer to the Mounting the Chuck and Faceplate procedures on Page 18 to mount the four-jaw chuck.

To load a workpiece in the four-jaw chuck:

1. DISCONNECT POWER TO THE LATHE/MILL!
2. Using the chuck key, open each jaw so the workpiece will lay flat against the chuck face.
3. Support the workpiece.
4. Lock the tailstock and then turn the tailstock quill so the dead center makes contact or is close to the center point of your workpiece (see Figure 31).
5. Turn each jaw until it just makes contact with the workpiece.
6. In an opposing pattern, tighten each jaw in small increments. After you have adjusted the first jaw, contineu tightening the opposing jaw. Check the dead center alignment frequently to make sure you have not wandered off your index point due to applying too much pressure to a single jaw.
7. After the workpiece is held in place, back the tailstock away and rotate the chuck by hand. The center point will move if the workpiece is out of center.
8. Make fine adjustments by slightly loosening one jaw and tightening the opposing jaw until the workpiece is precisely aligned. Use a dial indicator for fine tuning adjustments in alignment (see Figure 30).
9. Use a lower RPM when machining heavy eccentric workpieces.

WARNING!

Securely clamp your workpiece and remove the chuck key! Thrown objects from a lathe/mill can cause serious injury or death to the operator and to bystanders many feet away.

Using the Faceplate

The faceplate can be used to turn non-cylindrical parts or for off-center turning by clamping the workpiece to the faceplate.

To install the faceplate:

Refer to the Mounting the Chuck and Faceplate procedures on Page 18 to mount the faceplate.

To load a workpiece:

1. Support the workpiece.
2. Slide the tailstock to the workpiece.
3. Lock the tailstock and then turn the tailstock quill so the dead center makes contact with the center point of your workpiece.
4. Lock the tailstock quill when sufficient pressure is applied to hold the workpiece in place.

   Note: *Depending on the workpiece, some additional support may be needed.*
5. Secure the workpiece with a minimum of three independent clamping devices. Failure to follow this step may lead to deadly injury to yourself or bystanders. Take into account rotation and the cutting forces applied to the workpiece when clamping to the faceplate. Make sure your clamping application will not fail!
6. Use a lower RPM when machining heavy eccentric workpieces.

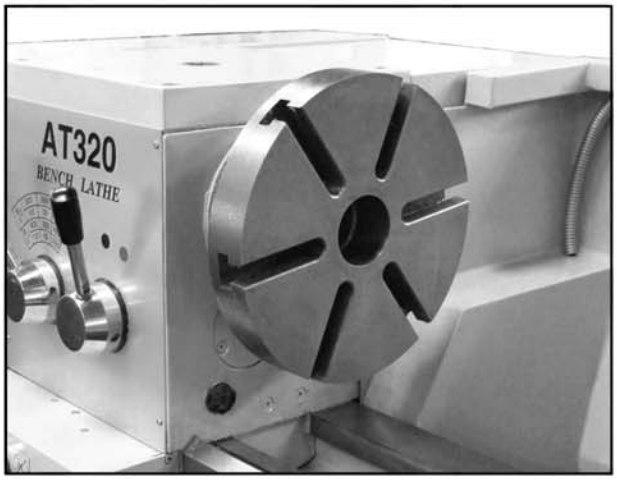

Figure 32: Faceplate installed.

WARNING!

Use a minimum of three independent clamping devices when turning eccentric workpieces. Failure to provide adequate clamping will cause workpiede to eject.

WARNING!

Securely clamp your workpiece and remove the chuck key! Thrown objects from a lathe/mill can cause serious injury or death to the operator and to bystanders many feet away.

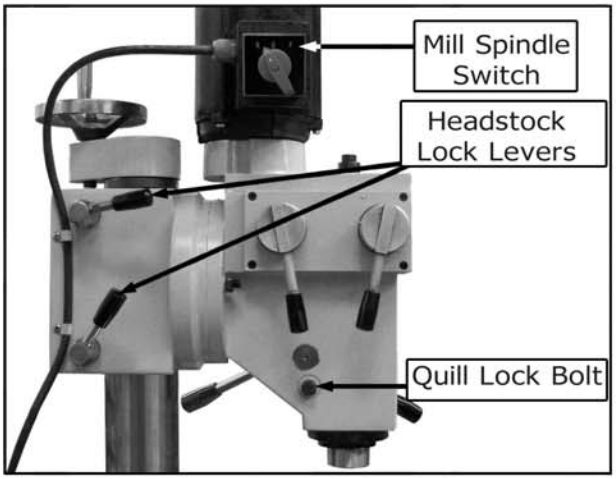

Figure 32: Start switch & spindle lock location.

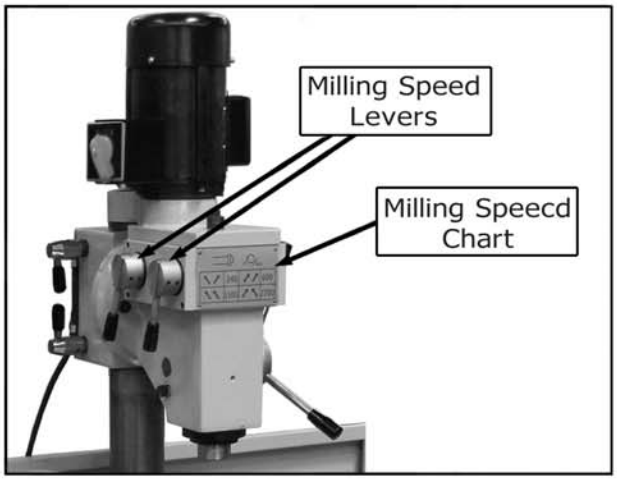

Figure 33: Gear Box and comtrols.

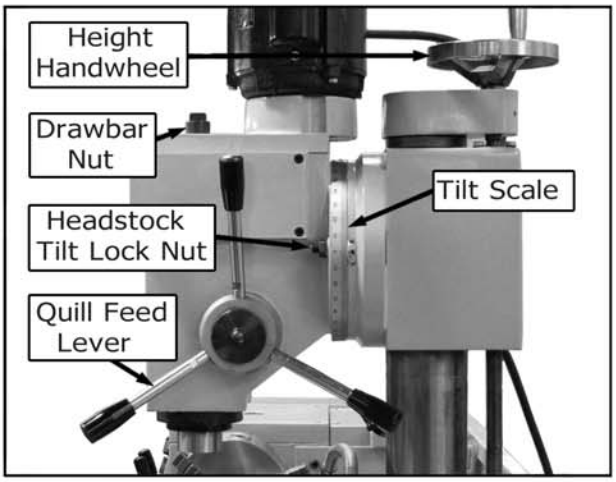

Figure 34: Quill Feed Lever & Drawbar Nut.

The headstock is use for drilling, tapering, milling.

Test run & break-in

Lubricated the mill and make sure there are no obstructions around or underneath the spindle and lock the lever.

Spindle on and off

First setting the spindle speed to 240 RPM, turn the mill on switch and run it a minimum of 10 minutes . Repeat this step on the other three rpm ranges.

Make sure the spindle is be stop.

Raise and lower

Loose the lock levers ,the headstock can freely slide on the column, rotated the handwheel to raise or lower the headstock to the desired position and then lock the levers.

Turn round

when turn the head stock please take care the wire.

Loose the lock levers, the headstock can turn round 360° , manual rotate the headstock to the desired position then lock the levers.

Tilt angle

Supporting the headstock, use a 17mm wrench and loosen both left and right lock nut ,can tilt the angle of headstock to your esired.Retighted the lock nuts.

Using the mill Table

The mill table using way is the same as lathe operations. it can cross slide and longitudinal feed. the cross slide is controlled by the cross slide handwheel, the longitudinal handwheel is controlled the longitudinal feed, and the lock at the back of the sidle (see Figure32,33)

If set the power feed for milling, please refer to setting power feed rate (see figure34)

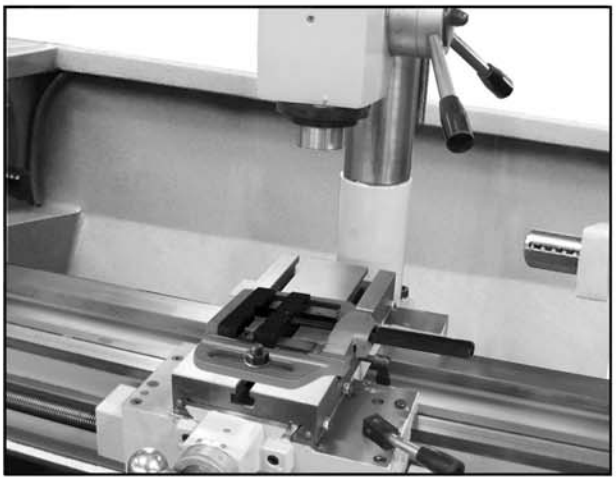

Figure 35: Start switch & spindle lock location.

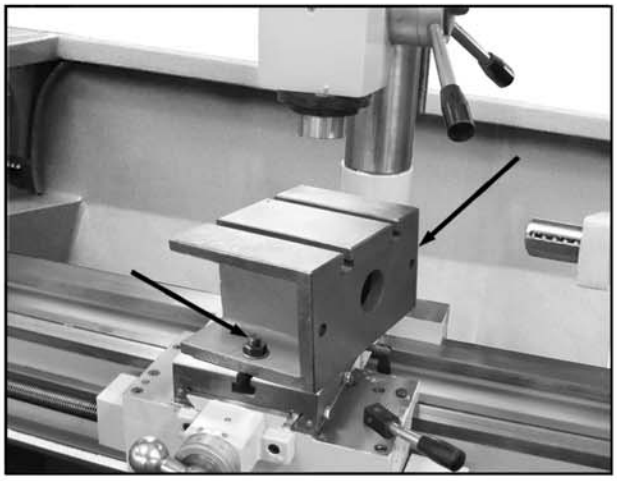

Figure 36: Gear Box and comtrols.

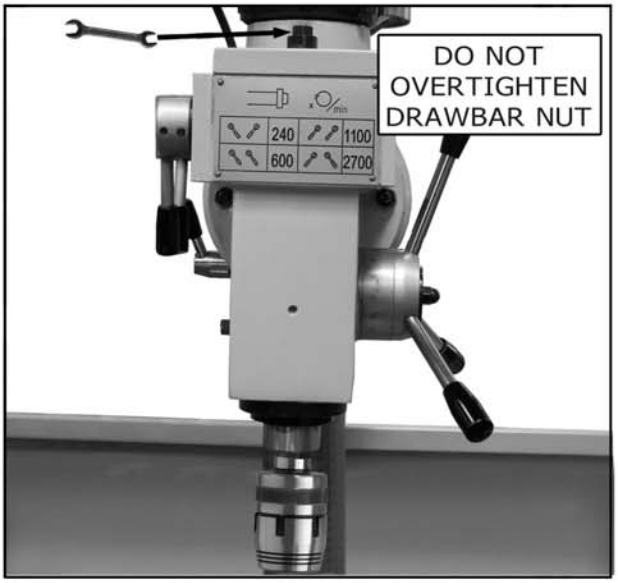

Figure 37: Algning drawbar with chuck arbor.

Using machine vice

Use a 17mm wrench loose the both side of the nut of the toolpost base Remove the toolpost from worktable.

Install the machine vice on the table and tighed the T bolt.

Rotated the handle so that loose or grip the workpiece. See figure 35

Using block

Use a 17mm wrench loose the both side of the nut of the toolpost base Remove the toolpost from worktable.

Install the block on the table and tighed the T bolt. Fixed the workpiece on the block with jig. See figure 36

Install cutter

DISCONNECT THE LATHE/MILL FROM POWER

Insert firmly the arbor the hole of the cutter and rotate the arbor so the slot in the arbor lines up with the pin (M6) inside of spindle. press the arbor up firmly to seat it with the spindle.

First finger tighten the drawbar into place and then use a 12mm wench to tighten the drawbar, the cutter is installed in the spindle.beforoe operating pleaseclear away all items from the cutter.

Removing the cutter

DISCONNECT THE LATHE/MILL FROM POWER

Raise the headstock to the highest position and loosen the drawbar with wrench,if the arbor is very tighted ,use a hammer or a piece of wood strike lightly strike the drawbar.replase and unscrew the drawbar ,catch the arbor and remove it. see figure 37

Cutting Speeds for High Speed Steel (HSS) Cutting Tools	
Workpiece Material	Cutting Speed (sfm)
Aluminum & alloys	300
Brass & Bronze	150
Copper	100
Cast Iron, soft	80
Cast Iron, hard	50
Mild Steel	90
Cast Steel	80
Alloy Steel, hard	40
Tool Steel	50
Stainless Steel	60
Titanium	50
Plastics	300-800
Wood	300-500

Figure 38. Cutting speed table for HSS cutting tools.

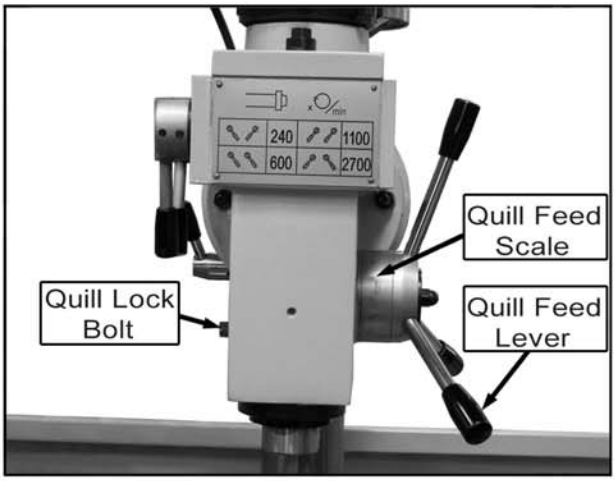

Figure 39: Quill Feed Lever & Lock Bolt.

Setting the Spindle RPM

Make sure the spindle is stopeed

Note: *You will only be able to get an approximate RPM value with the variable speed knob.*

Manual rotate the two handle by which can adjust speed rang.

Select the cutting speed required for the material of your workpiece using the table in Figure 38.

Note: *Double the cutting speed for carbide cutting tools. These values are a guideline only. Refer to the MACHINERY'S HANDBOOK for more detailed information.*

Measure the diameter of your cutting tool in inches.

Use the following formula to determine the needed RPM for your operation:

$$\frac{\text{Cutting Speed X4}}{\text{Tool Diameter}} = \text{RPM}$$

Move the mill gearbox levers to the nearest milling speed RPM.

Using the mill

The quill feed include milling or drilling ,it is controlled by the hanle on the right of the headstock and a lock bolt on thr left side of the headstock.

Loosen the lock bolt to release the quill, if drillling, pull the handle, the quill will feed down toward the workpiece. if milling hold the quill at a particular depth and tighten the lock bolt(figure 39).

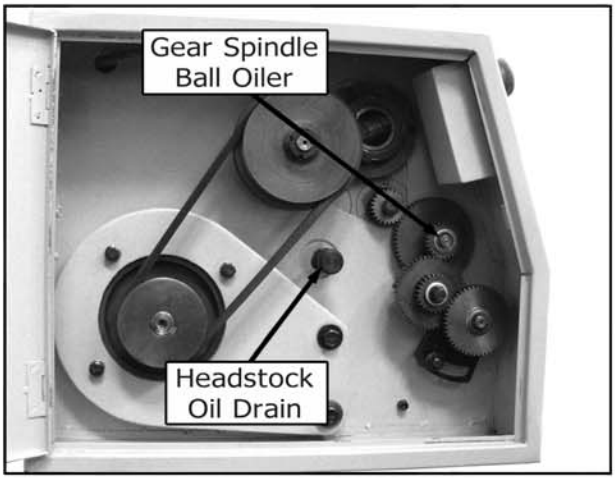

Figure 40: Start switch & spindle lock location.

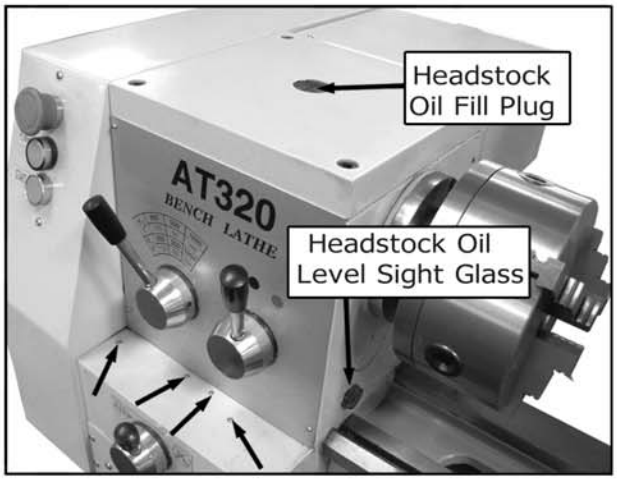

Figure 41: Headstock and Gear box.

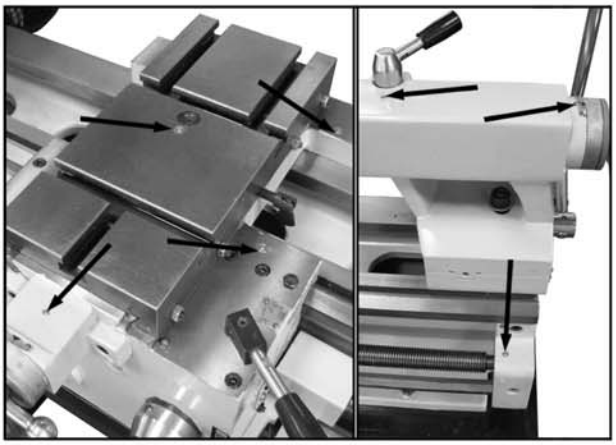

Figure 42: Typical ball fitting locations.

BASIC MAINTENANCE

WARNING !

Ensure that the machine is unplugged from the power supply before attempting any maintenance.

. Inspecting this machine before each time using, and regular periodic maintenance.

Lubricate the leadscrew(oil point on the leadscrew).

Lubricate the cross slide (oil point behind scale and two on front face of slide).

Lubricate the compound slide (two oil points on top face).

Lubricate the tailstock (two oil points on top face).

. Clean the machine after each use and oil all machined surfaces.

. If any play becomes apparent in the slides adjust as follows:

Loosen the lock nuts (compound slide only) of the gib strip adjusting screws (fig shows the screws for the compound slide.

Those for the cross slide are on the right-hand side of the slide, and those for the tail stock are either side of the locking lever).

Lightly tighten the screws equally and check that the slide will not move with normal effort on the handle.

Back-off each screw by 1/4 turn (tighten the lock nuts, compound slide only).

Check that there is no play and that the slide moves smoothly.

. If further adjustment is required, tighten or loosen the screws as necessary by 1/8th of a turn only and recheck.

. Keep the headstock oil level at 3/4 full, after break in you can change with good quality (such as Mobil®DTE®)after that, each three month change once or more frequently if require.

Lubrication Positions List

Item in figure.	Lubrication Positions	Located Parts	Lubrication Methods	Types Of Lubrication Oil	Lubrication Period
1	Change gear, Shaft Sleeve	Left Trestle	Gun Oiling	Machine Oil	One year
2	Lathe head shaft Bearing	Lathe Head Stock	Greasing	Grease	One Year
3	Driving bearing	Left trestle	Greasing	Grease	One Year
4	Dovetail guide way, screw	carriage	Gun Oiling	Machine oil	Twice a day
5	Gear, Rack	Drill-mill HeadStock	Greasing	Grease	One month
6	Tool post lead screw, surface of guide way	Tool post	Gun oiling	Machine oil	Twice a day
7	Long. feed screw	Feed screw	Gun Oiling	Machine Oil	Twice a Day
8	Bed guide way	Bed	Gun Oiling	Machine Oil	Twice a Day
9	Tail Stock Sleeve	Tail Stock	Gun Oiling	Machine Oil	Twice a Day
10	Bearing sleeve	Tailstock	Gun Oiling	Machine Oil	Twice a Day
11	Bearing seat	Bed	Gun Oiling	Machine Oil	Twice a Day
12	Cross nut, lead screw	Small carriage	Gun Oiling	Machine Oil	Twice a Day
13	Bearing sleeve	Small carriage	Gun Oiling	Machine Oil	Twice a Day
14	Driving bearing	Lead screw seat	Greasing	Grease	6 a Year
15	Gear shaft	Driving box	Gun Oiling	Machine Oil	Twice a day
16	Bearing	Input pulley	Greasing	Grease	One Day
17	Gear	Drill-mill HeadStock	Greasing	Grease	One Year
18	Elevator Lead Screw, Nut	Drill-mill Headstock	Gun Oiling	Machine Oil	Twice a Day
19	Column	Drill-mill Headstock	Gun Oiling	Machine Oil	One Day

Note.

1) It is recommended to use 3#CA Grease for the "grease" in the table.

2) Use 20# machine oil for the "machine oil" in the table.

3) The parts lubricated should be cleaned in due .The oil in the carriage should be changed in due. Oil again to the oil sign.

Gib adjustment

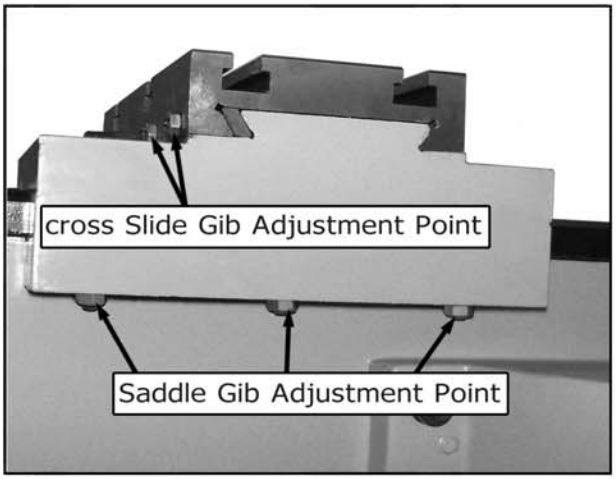

Figure 43: Gib adjustment points.

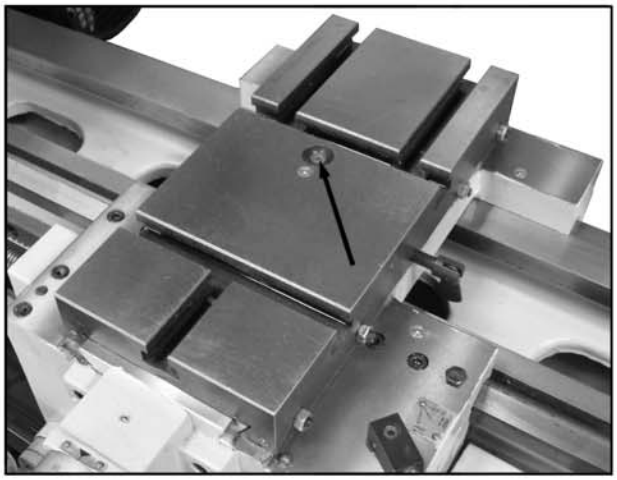

Figure 44: Cross slide backlash adjustment cap screw.

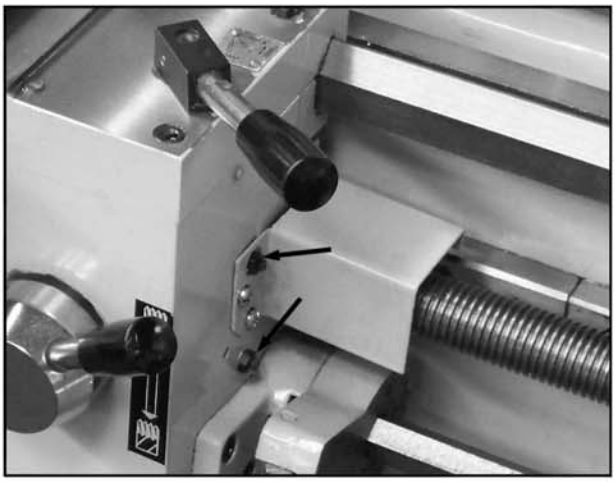

Figure 45: Half-nut gib adjustment location.

There's a piece of chock between the table and the carriage and also one between the carriage and the bed to adjust the installing clearance which have great effect on the moving stability of the table and the final machining accuracy. The way to judge the width of the clearance is: to pull the table clockwise and counter clockwise alternatively with the hands holding the two ends of the table.

As showed in Fig43,44,45, both side A and side B of the carriage have set screws and screw nuts to adjust the clearances of the chocks. The adjusting method tighten the set screw then loosen it for about 1/5 round, tighten the set screw again with screw nut, finally check the clearance of the table. Repeat this again and again till the clearance is small and the carriage table can be moved smoothly by hand.

Gib adjustment

The gibs between top slide and bed slideway, worktable and cross slide adjusted by wedges and nuts had been suitably adjusted before ex works. If any new adjustment is required, please make the judgment and adjustment as per the instructions shown in the picture.

This kind of gib is very important for the accuracy of the lathe movement. ,over –tightening the abrasion of the slideway shall get bigger and it shall be difficult for the carriage to move; damage the slide lead screw ,and half nut. Loose gibs, the movement of the carriage and top slide shall be unsteady and the accurate tooling cannot be achieved. When making adjustment, move the carriage and top slide vertically against the slideway, and decide if the tolerance is too big or not against the feeling of shaking. Moving the carriage and toolpost by handwheels to judge if the gib is small or not against the resistance. No matter the gib is too big or too small, the machine shall be re-adjust. The positions to be adjusted as show for the four gibs, loose the jam nuts and turn the three set screws untill slight tension felt and the gib plates are slightly pre-loaded against the underside of the flat-way, tighten the jam nuts when finished.

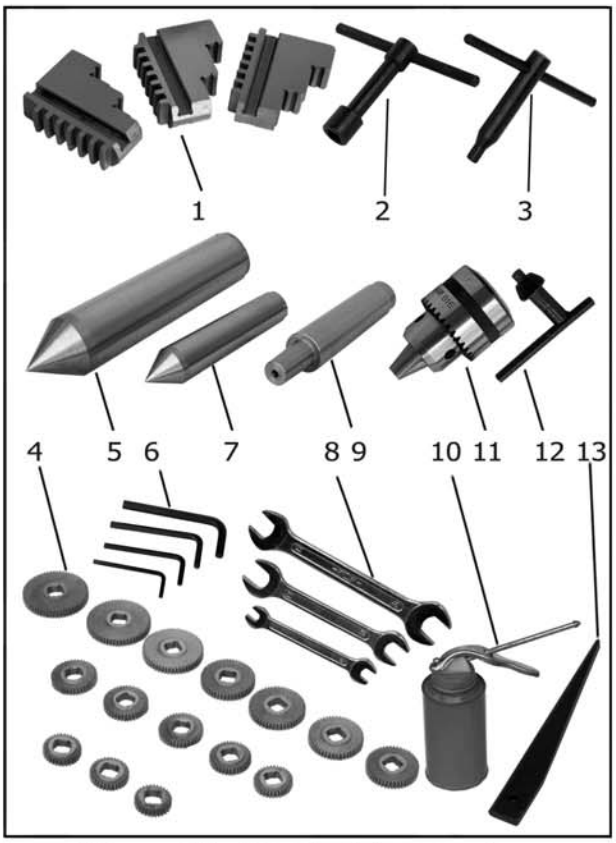

Figure 46: Standard Accessories.

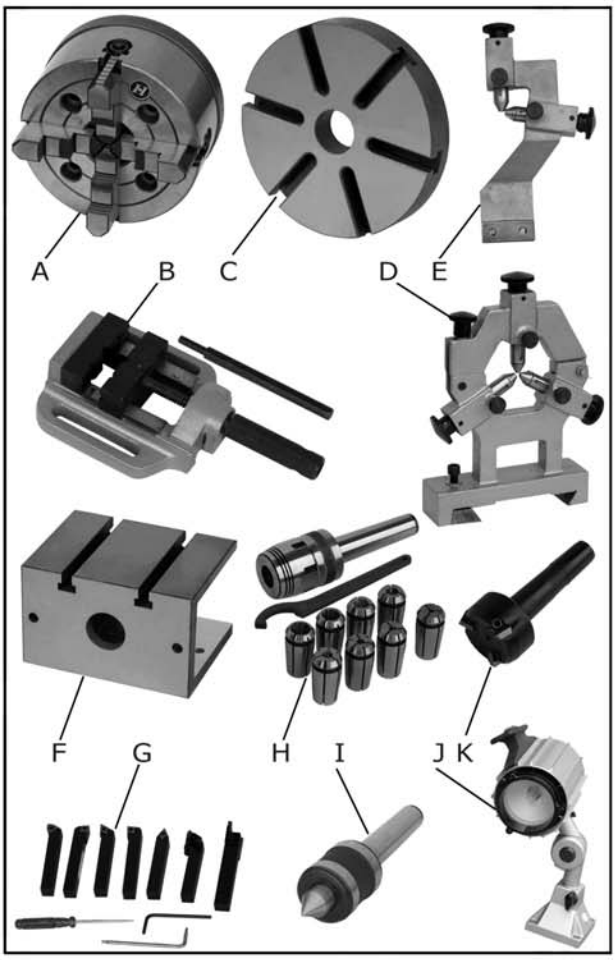

Figure 47: Optional Accessories.

Standard Accessories

The parts have been removed from the box, you should have the following items:

	Qty
1. Three-jaw Chuck Internal Jaws	1
2. Tool Post T-handle Wrench	1
3. Three-jaw Chuck Key	1
4. Change Gear Set	
Gear(28&35 Coarse Tooth)	1
Change Gear(24-tooth)	1
Change Gear(25-tooth)	1
Change Gear(27-tooth)	1
Change Gear(28-tooth)	1
Change Gear(30-tooth)	1
Change Gear(32-tooth)	1
Change Gear(34-tooth)	1
Change Gear(35-tooth)	1
Change Gear(36-tooth)	1
Change Gear(40-tooth)	1
Change Gear(42-tooth)	1
Change Gear(44-tooth)	1
Change Gear(46-tooth)	1
Change Gear(52-tooth)	1
5. Dead Center MT5#	1
6. Hex Wrench Set(4,5,6,8)	1 EA
7. Dead Center MT3#	1
8. Wrench Set(8-10,14-17,17-19)	1 EA
9. Arbor JT33 to MT3#	1
10. Oil Gun	1
11. Drill Chuck(MT3#)	1
12. Drill Chuck Key	1
13. Wedge	1

Optional Accessories

A. 8" Four-jaw Universal Chuck & blackplate
B. Vice
C. 8" Faceplate
D. Steady Rest
E. Follow Rest
F. Machine Block
G. Turning Tool Set
H. End Mill Chuck
I. Rolling Center
J. Working Lamp
K. Face Milling Cutter

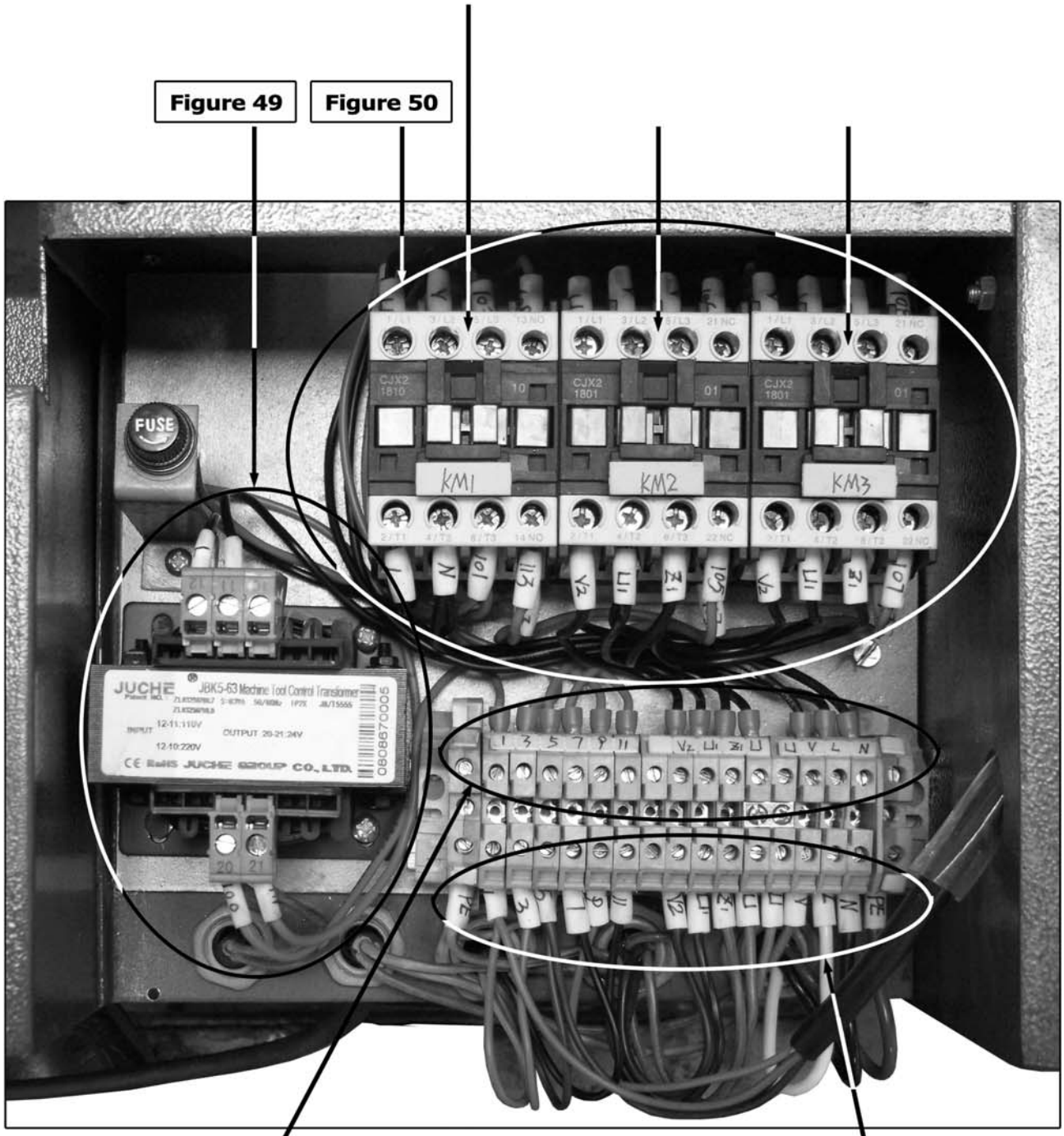

Figure 48: Electrical panel.

Figure 49: Transformer(JBK5-63).

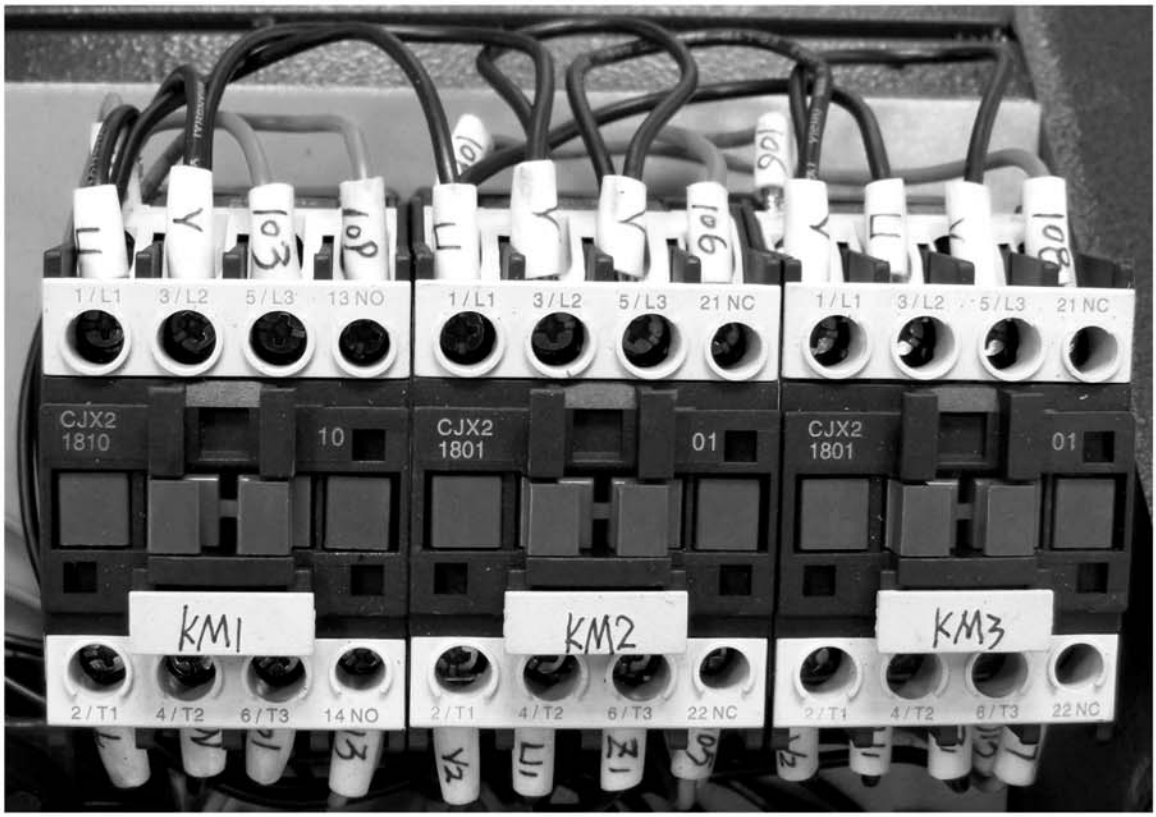

Figure 50: Contactor wiring.

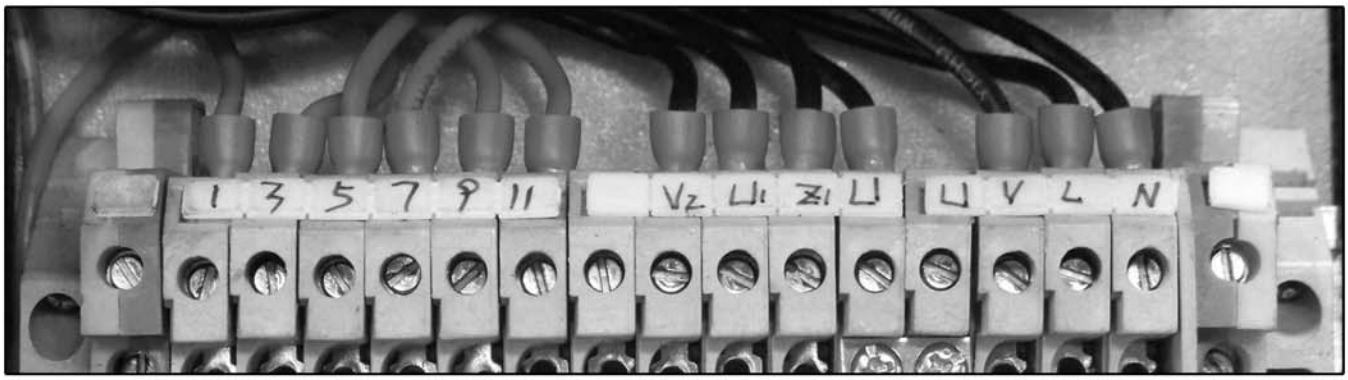

Figure 51: Junction block wiring.

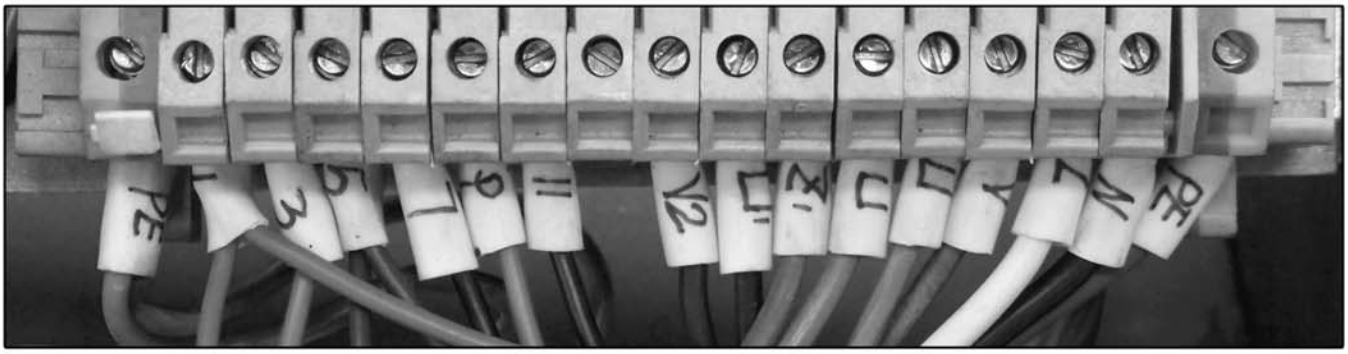

Figure 52: Junction block wiring.

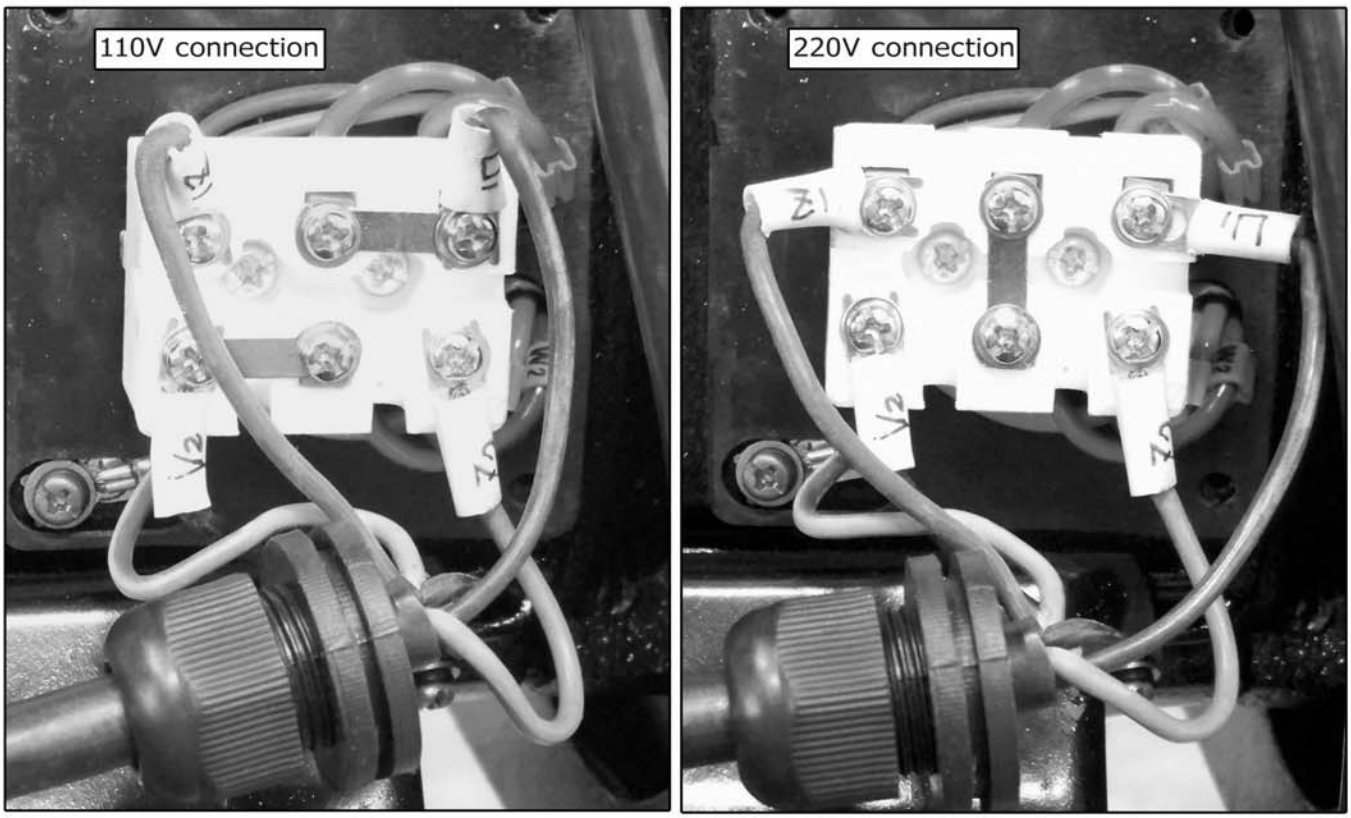

Figure 53: Motor connection.

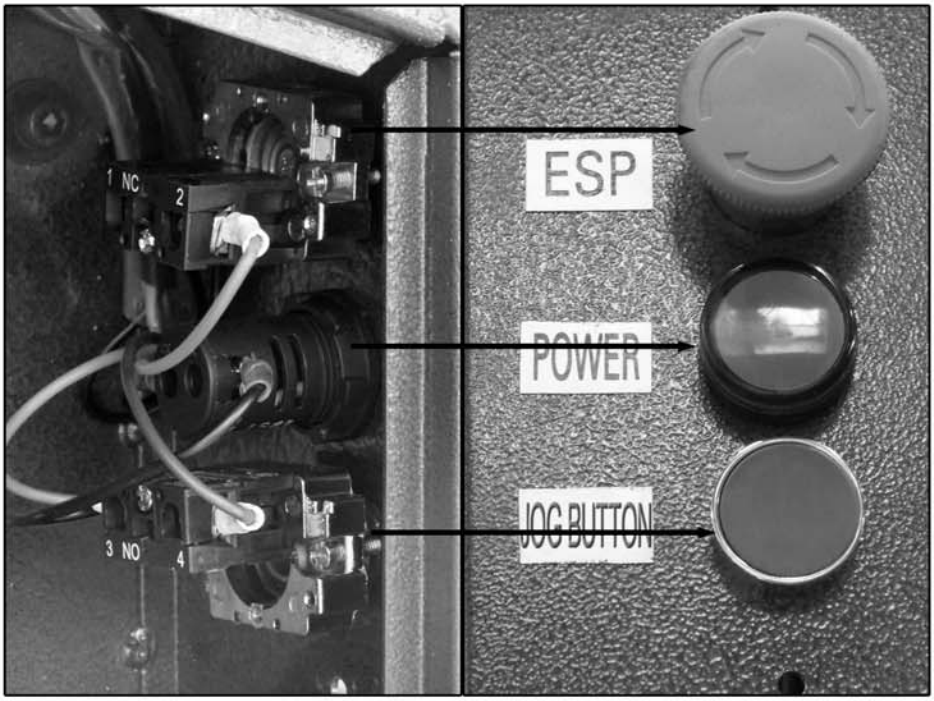

Figure 54: Lathe control panel wiring and controls.

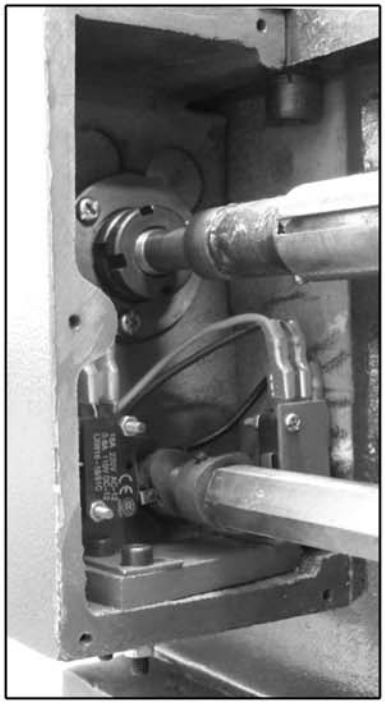

Figure 55: Lathe motor direction limit switchs.

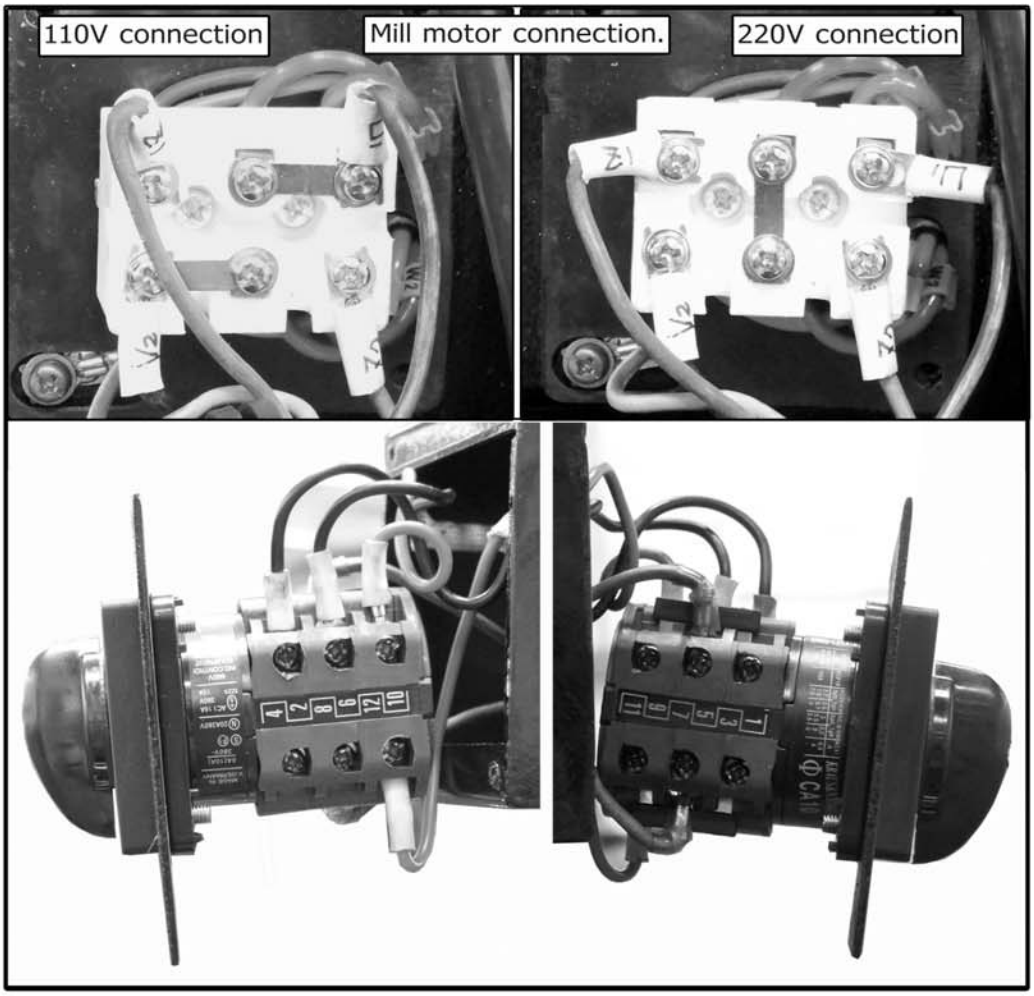

Figure 56: Mill power switch.

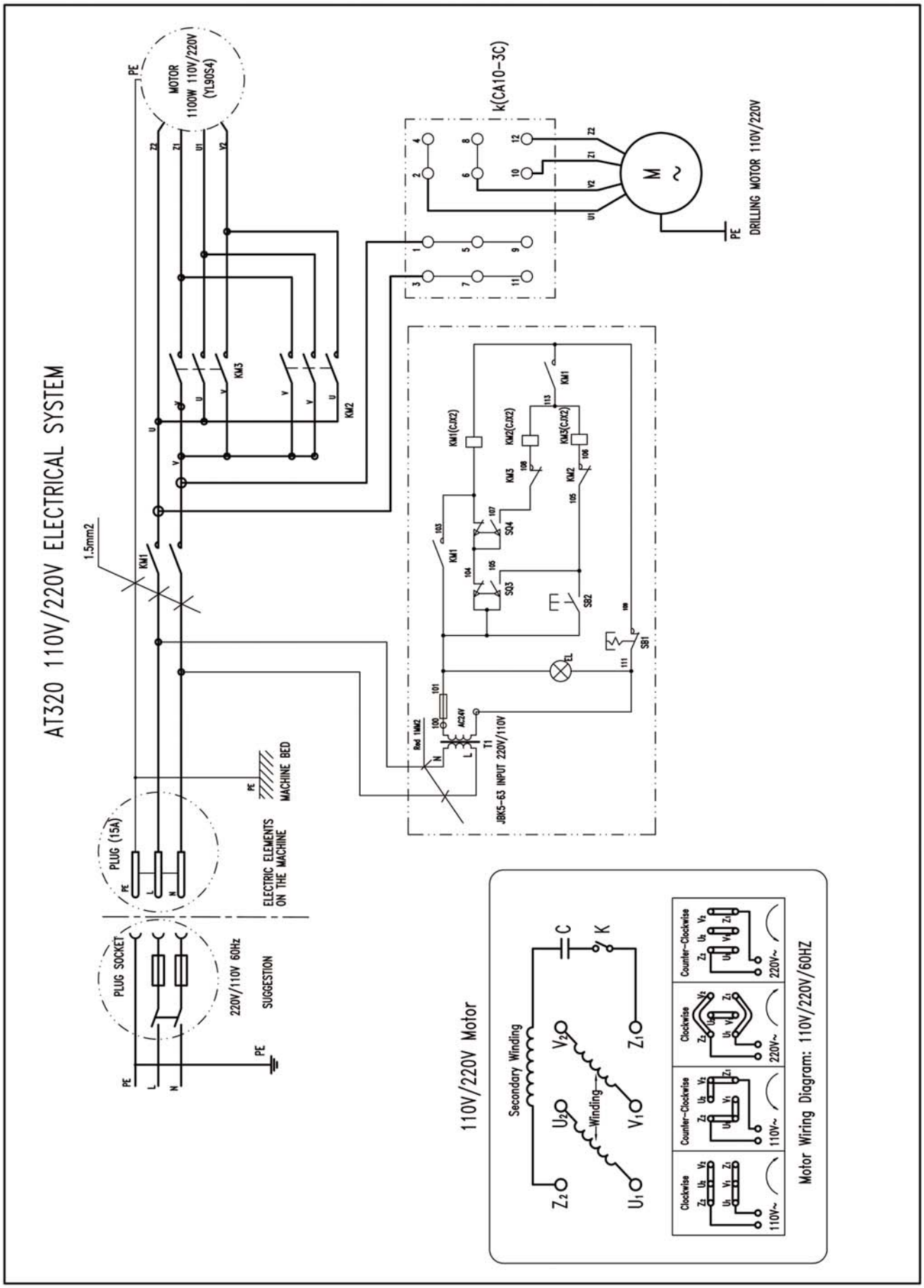

Figure 57: Wiring diagram.

Uprigt Colum Diagram

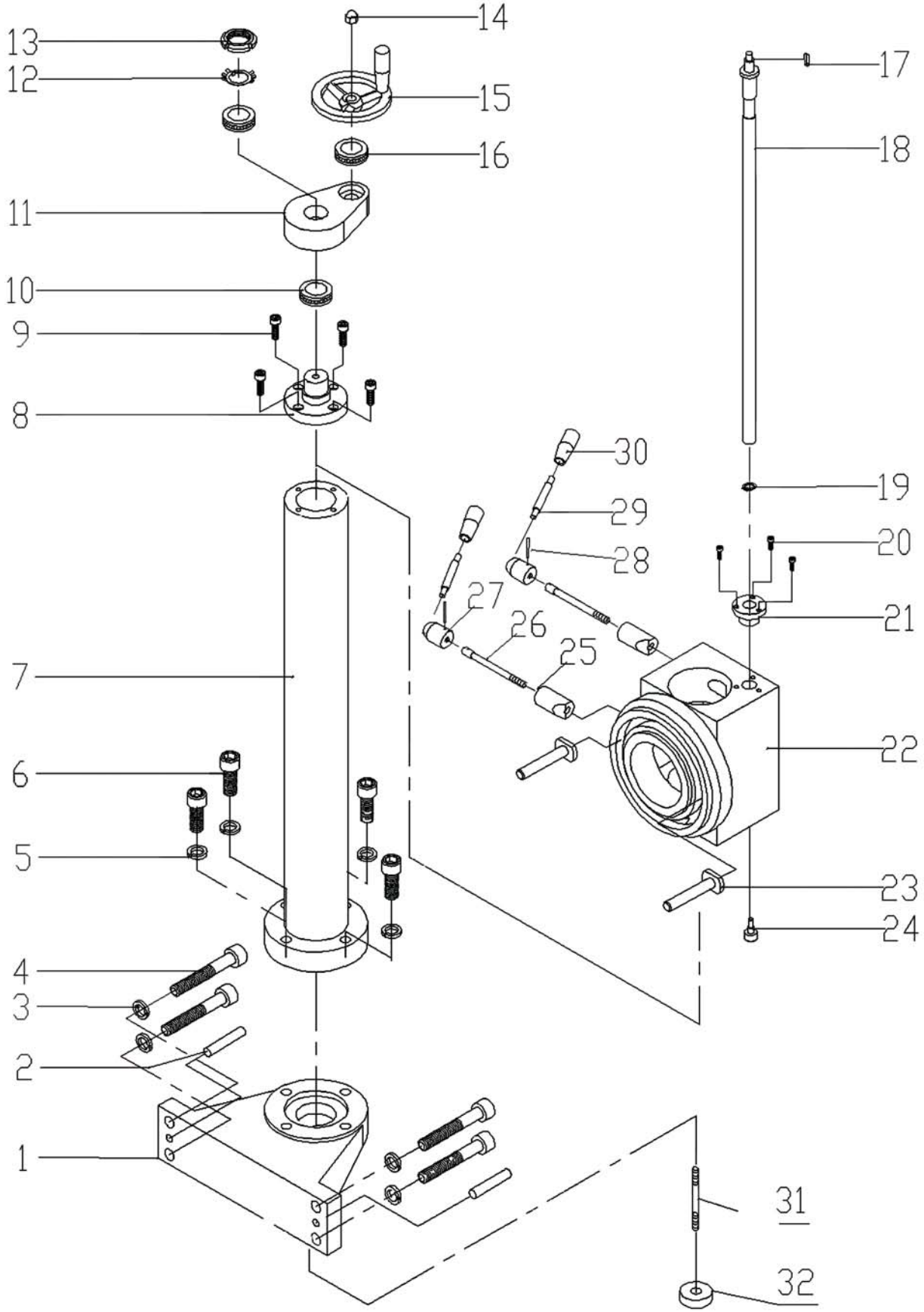

Uprigt Colum Parts List

NO.	PARTS	DESCRIPTION	
1	AT320C001	Pedestal	AT320-00-007
2	AT320C002	Taper pin	8×35 GB117-86
3	AT320C003	Washer	12 GB93-87
4	AT320C004	Hexagon socket head screw	M12×40 GB70-85
5	AT320C005	Washer	12 GB93-87
6	AT320C006	Hexagon socket head screw	M12×55 GB70-85
7	AT320C007	Uprigt colum	AT320-00-001
8	AT320C008	Column head	AT520-01-004
9	AT320C009	Hexagon socket head screw	M6×20 GB70-85
10	AT320C010	Bearing	8106 GB301-84
11	AT320C011	Column top seat	AT320-00-004
12	AT320C012	Washer	30 GB858-88
13	AT320C013	Round nut	M30×1.5 GB812-88
14	AT320C014	Nut	M10 GB923-88
15	AT320C015	Hand wheelB	12×100 GB4141.22-84
16	AT320C016	Bearing	8103 GB301-84
17	AT320C017	Plain parallel key	4×12 GB1096-79
18	AT320C018	Height adjustment lead screw	AT320-00-005
19	AT320C019	External snap ring	17 GB894.1-86
20	AT320C020	Hexagon socket head screw	M6×25 GB70-85
21	AT320C021	Height adjustment nut	AT520-01-006
22	AT320C022	Circumgyrate seat	AT320-00-002
23	AT320C023	Bolts	M10×45 GB5783-86
24	AT320C024	Screw	AT320-00-003
25	AT320C025	Locking sleeve	AT320-00-008
26	AT320C026	Stud	AT320-00-009
27	AT320C027	Handle seat	AT300-00-123
28	AT320C028	Taper pin	3×25 GB117-86
29	AT320C029	Handle lever	M8×40 GB4141.15-84
30	AT320C030	Knob	M8×40 GB4141.14-84
31	AT320C031	Screw	AT320-00-017
32	AT320C032	Nut	AT320-00-022

Bed Diagram

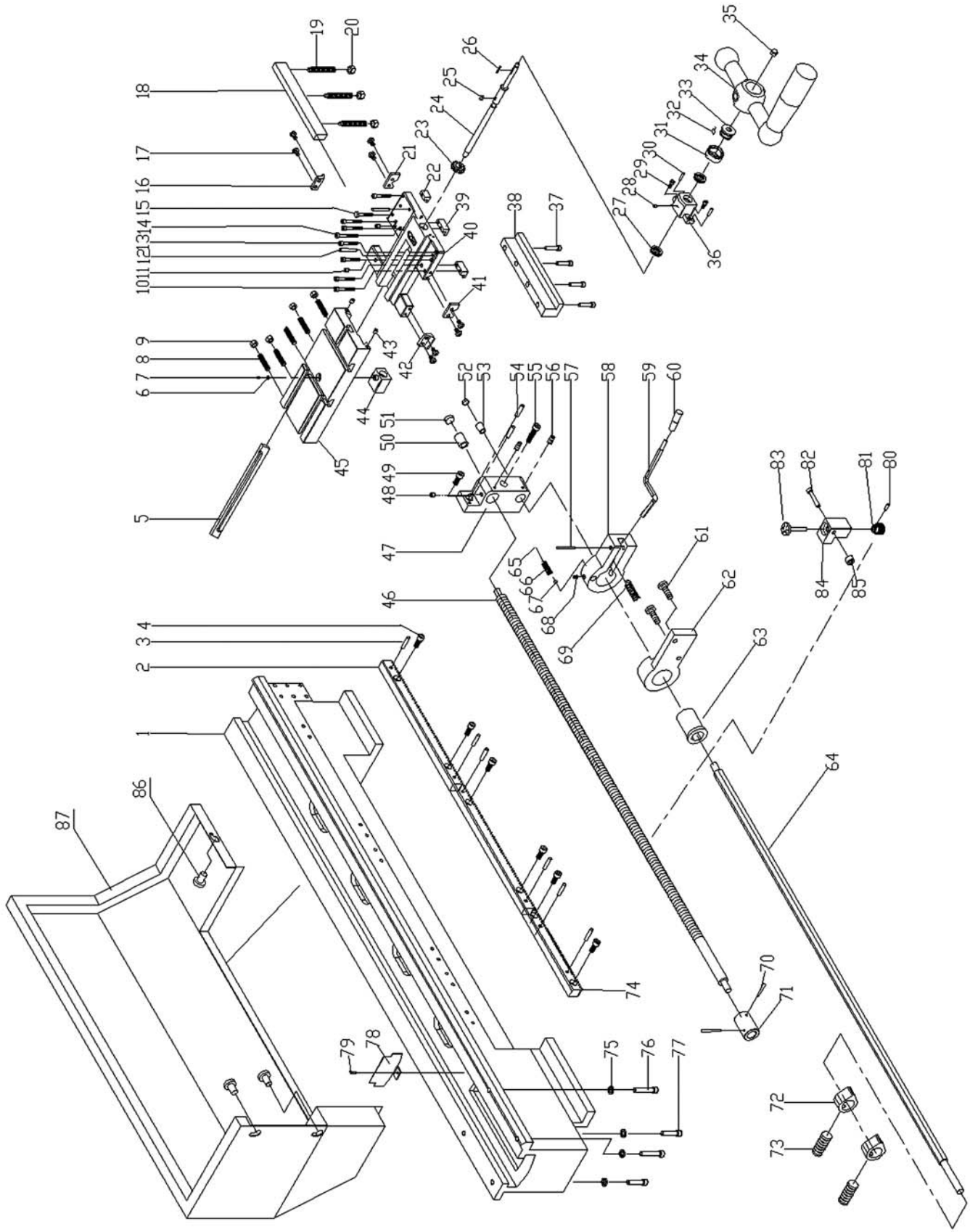
1
2
3
4
5
6
7
8
9
10
11
12
13
14
15
16
17
18
19
20
21
22
23
24
25
26
27
28
29
30
31
32
33
34
35
36
37
38
39
40
41
42
43
44
45
46
47
48
49
50
51
52
53
54
55
56
57
58
59
60
61
62
63
64
65
66
67
68
69
70
71
72
73
74
75
76
77
78
79
80
81
82
83
84
85
86
87

Bed Parts List

NO.	PARTS	DESCRIPTION	
1	AT320B001	Bed	CQ9332A-01-001
2	AT320B002	Racks	CQ9332-01-003
3	AT320B003	Taper pin	6×18 GB117-86
4	AT320B004	Hexagon socket cap head screws	M8×16 GB70-85
5	AT320B005	Chock	CQ9332-01-005
6	AT320B006	Washer	CQ9332-05-015
7	AT320B007	Screw	M5×12 GB68-85
8	AT320B008	Screw	M6×25 GB75-85
9	AT320B009	Hexagon nuts	M6 GB6170-86
10	AT320B010	Hexagon socket cap head screws	M6×35 GB70-85
11	AT320B011	Oil cup	8 GB1155-79
12	AT320B012	Taper pin	6×40 GB117-86
13	AT320B013	Hexagon socket cap head screws	M6×30 GB70-85
14	AT320B014	Hexagon socket cap head screws	M6×45 GB70-85
15	AT320B015	Hexagon head bolts	M6×40 GB5782-86
16	AT320B016	The scratch board in right front	HA300-05-044
17	AT320B017	Cross recessed pan head screws	M5×10 GB818-85
18	AT320B018	Chock	CQ9332-01-008
19	AT320B019	Hexagon socket set screws with dog point	M8×20 GB79-85
20	AT320B020	Hexagon nuts	M8 GB6170-86
21	AT320B021	The scratch board in right back	HA300-05-041
22	AT320B022	Chain up block	CQ9332-05-027
23	AT320B023	Gear	CQ9332-05-006
24	AT320B024	Cross feed screw rod	AT320-05-004
25	AT320B025	Plain parralleled key	5×16 GB1096-79
26	AT320B026	Plain parralleled key	4×18 GB1096-79
27	AT320B027	Rolling bearing	8201 GB301-84
28	AT320B028	Oil cup	6 GB1155-79
29	AT320B029	Hexagon socket cap head screws	M6×16 GB70-85
30	AT320B030	Taper pin	5×20 GB117-86
31	AT320B031	Dial	AT320-05-024A
32	AT320B032	Spring lamination	AT300-03-139
33	AT320B033	Dial sleeve	AT300-03-138
34	AT320B034	Handles with sleeve	12×40 GB4141.9-84
35	AT320B035	Nut	M10 GB923-88
36	AT320B036	Cross feed screw seat	CQ9332-05-008
37	AT320B037	Hexagon socket cap head screws	M8×40 GB70-85
38	AT320B038	Behind board	CQ9332-01-007
39	AT320B039	Forward board	CQ9332-5-005
40	AT320B040	Carriage	CQ9332A-05-002
41	AT320B041	The scratch board in left back	HA300-05-042
42	AT320B042	The scratch board in left front	HA300-05-044
43	AT320B043	Oil cup	6 GB1155-79
44	AT320B044	Cross nut	AT320-01-009
45	AT320B045	Worktable	AT320-00-006
46	AT320B046	Longitudinal feed screw	AT320-01-002
47	AT320B047	Right pedestal	CQ9332A-01-010
48	AT320B048	Oil cup	6 GB1155-79
49	AT320B049	Hexagon socket cap head screws	M8×20 GB70-85
50	AT320B050	Sleeve	CQ9332-01-010

Bed Parts List

NO.	PARTS	DESCRIPTION	
51	AT320B051	Spigots	CQ9332-02-011
52	AT320B052	Spigots	AT520-03-106
53	AT320B053	Sleeve	CQ9332A-01-012
54	AT320B054	Taper	pin 5×30 GB117-86
55	AT320B055	Hexagon socke cap head screws	M8×60 GB70-85
56	AT320B056	Slotted set screws with cone point	M5×10 GB71-85
57	AT320B057	Straight pin	5×35 GB119-86
58	AT320B058	Locking handle seat	CQ9332A-01-007
59	AT320B059	Steer sleeve	CQ9332A-01-004
60	AT320B060	Sleeve knobs	M10×32 B4141.12-84
61	AT320B061	Hexagon socket cap head screws	M6×12 GB70-85
62	AT320B062	Pedestal	CQ9332A-01-009
63	AT320B063	Shaft sleeve	CQ9332A-01-006A
64	AT320B064	Steer perch	CQ9332A-01-003A
65	AT320B065	Set screw with flat point	M8×8 GB73-85
66	AT320B066	Spring	0.5×6×15 GB2089-80
67	AT320B067	Steel ball	6 GB307-88
68	AT320B068	Slotted set screws with cone point	M8×15 GB71-85
69	AT320B069	Spring	0.5×6×25 GB2089-80
70	AT320B070	Taper pin	4×25 GB117-86
71	AT320B071	Coupling sleeve	AT520-03-014
72	AT320B072	Cam	CQ9332A-01-008
73	AT320B073	Slotted set screws with cone point	M4×6 GB71-85
74	AT320B074	Racks	CQ9332A-01-013
75	AT320B075	Washer	10 GB93-87
76	AT320B076	Hexagon socket cap head screws	M10×40 GB70-85
77	AT320B077	Hexagon socket cap head screws	M10×35 GB70-85
78	AT320B078	Shield	CQ9332-00-016
79	AT320B079	Hexagon socket cap head screws	M5×10 GB70-85
80	AT320B080	Taper pin	3×16 GB117-86
81	AT320B081	Worm wheel	AT400A-00-302
82	AT320B082	Hexagon socket cap head screws	M6×40 GB70-85
83	AT320B083	Thread indicator	AT520-00-302
84	AT320B084	Dial thread indicator	AT400A-00-301
85	AT320B085	Mat	AT400A-00-303
86	AT320B086	Screw	M4×16 GB65-85
87	AT320B087	After baffle	CQ9332A-00-019

Lathe Head Diagram

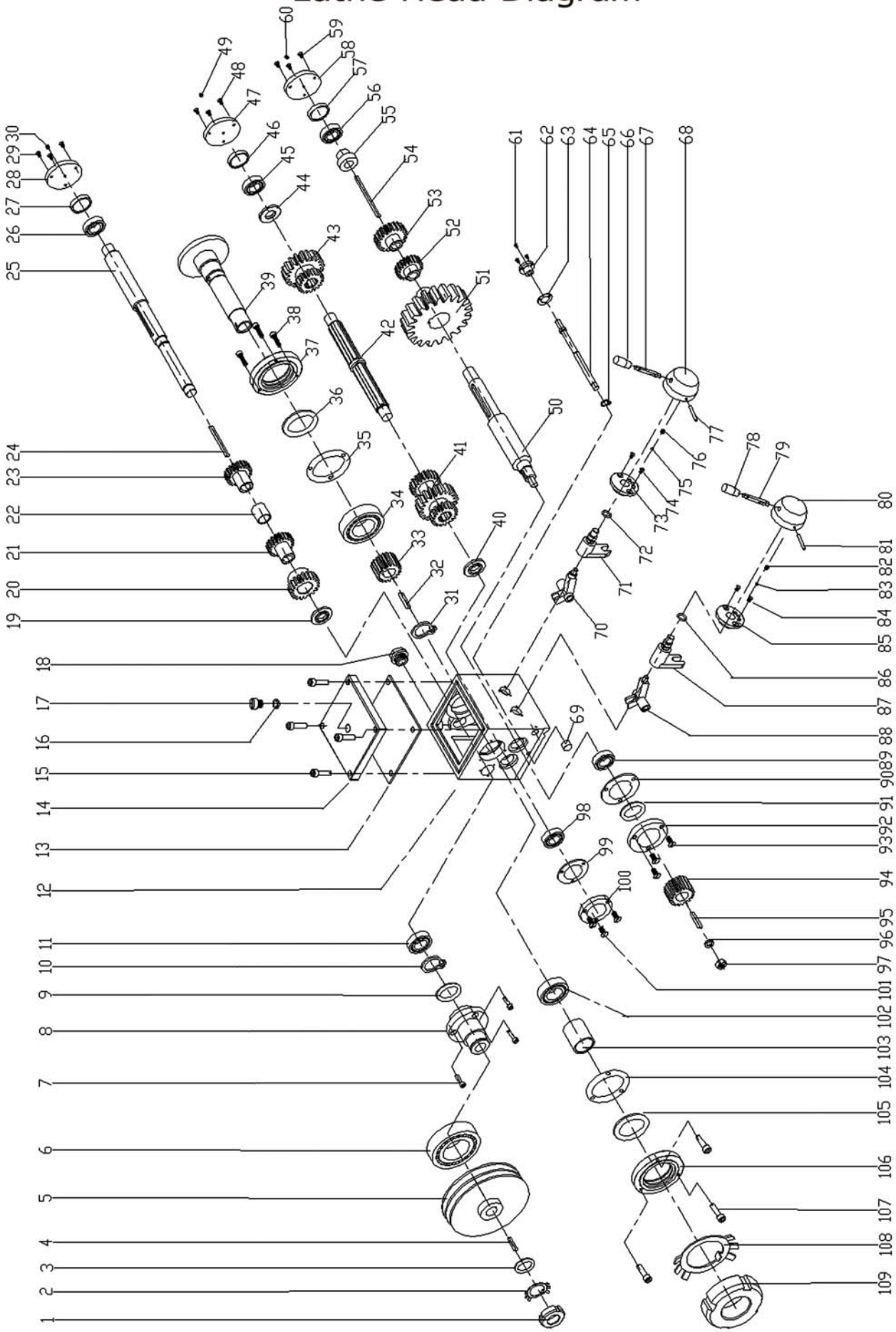

Lathe head Parts List

NO.	PARTS	DESCRIPTION	
1	AT320LH001	Spanner nut	M16×1.5 GB812-88
2	AT320LH002	Lock washer for circular nut	16 GB858-88
3	AT320LH003	Plain washrs	16 GB97.2-85
4	AT320LH004	Plain paralle key	5×16 GB1096-79
5	AT320LH005	Spindle pulley	CQ9332A-02-016
6	AT320LH006	Taper roller oearing	60206 GB298-89
7	AT320LH007	Hexagon socket head screw	M5×12 GB70-85
8	AT320LH008	Pulley seat	CQ9332-02-017
9	AT320LH009	Felt collar	16 JB/GQ0324-89
10	AT320LH010	Circlips for shaft-type A	16 GB894.1-86
11	AT320LH011	Single-row ball bearing	203 GB276-89
12	AT320LH012	Lathe head	CQ9332A-02-001
13	AT320LH013	Pressurize washer	CQ9332-02-002
14	AT320LH014	Transmission cover	CQ9332-02-003
15	AT320LH015	Hexagon socket head screw	M8×30 GB70-85
16	AT320LH016	Rubber ring	30×20×2 T300-04-141
17	AT320LH017	Oil port plug	M20×1.5 Q/ZB220-77
18	AT320LH018	Oil level indicator	M16×1.5 GB1160.2-89
19	AT320LH019	Sleeve spacer	CQ9332-02-049
20	AT320LH020	Gear	CQ9332-02-019
21	AT320LH021	Gear	CQ9332-02-021
22	AT320LH022	Sleeve spacer	CQ9332-02-047
23	AT320LH023	Gear	CQ9332-02-022
24	AT320LH024	Plain paralle Key	5×70 GB1096-79
25	AT320LH025	Spindle shaft	CQ9332-02-024
26	AT320LH026	Single-row ball bearing	203 GB276-89
27	AT320LH027	Bearing sleeve	CQ9332-02-046
28	AT320LH028	Right sleeve	CQ9332-02-026
29	AT320LH029	Screw	M5×12 GB819-85
30	AT320LH030	Screw	M6×8 GB78-85
31	AT320LH031	External snap ring	55 GB894.1-86
32	AT320LH032	Thin flat key	12×18 GB1567-79
33	AT320LH033	Gear	CQ9332-02-007B
34	AT320LH034	Taper roller oearing	D2007112 GB297-84
35	AT320LH035	Pressurize washer	CQ9332-02-006
36	AT320LH036	Felt collar	68 JB/GQ0324-89
37	AT320LH037	Mainshaft bearing oil seal	AT400-04-123
38	AT320LH038	Hexagon socket head screw	M5×20 GB70-85
39	AT320LH039	Lathe spindle	CQ9332-02-004
40	AT320LH040	Sleeve spacer	CQ9332-02-049
41	AT320LH041	Gear	CQ9332-02-023
42	AT320LH042	Middle shaft	CQ9332-02-028
43	AT320LH043	Gear	CQ9332-02-025
44	AT320LH044	Sleeve spacer	CQ9332-02-050
45	AT320LH045	Single-row ball bearing	203 GB276-89
46	AT320LH046	Bearing sleeve	CQ9332-02-046
47	AT320LH047	Right sleeve	CQ9332-02-026
48	AT320LH048	Screw	M5×12 GB819-85
49	AT320LH049	Screw	M6×8 GB78-85
50	AT320LH050	Output shaft	CQ9332-02-011
51	AT320LH051	Gear	CQ9332-02-010
52	AT320LH052	Gear	CQ9332-02-009
53	AT320LH053	Gear	CQ9332-02-008
54	AT320LH054	Plain paralle Key	5×60 GB1096-79
55	AT320LH055	Sleeve spacer	CQ9332-02-030

Lathe head Parts List

NO.	PARTS	DESCRIPTION	
56	AT320LH056	Single-row ball bearing	203 GB276-89
57	AT320LH057	Bearing sleeve	CQ9332-02-046
58	AT320LH058	Right sleeve	CQ9332-02-026
59	AT320LH059	Screw	M5×12 GB819-85
60	AT320LH060	Screw	M6×8 GB78-85
61	AT320LH061	Screw	M5×12 GB819-85
62	AT320LH062	End cap	CQ9332-02-039
63	AT320LH063	Pressurize washer	CQ9332-02-040
64	AT320LH064	Shifting fork shaft	CQ9332-02-037
65	AT320LH065	External snap ring	12 GB894.1-86
66	AT320LH066	KnobB	M8×40 B4141.14-84
67	AT320LH067	Handle lever	BM8×63 B4141.15-84
68	AT320LH068	Handle seat	12×50 GB4141.19-84
69	AT320LH069	Spigots	CQ9332-02-038
70	AT320LH070	Right shifting fork	CQ9332-02-033
71	AT320LH071	Right shifting fork shaft	CQ9332-02-034
72	AT320LH072	O-seal ring	16×2.4 GB1235-76
73	AT320LH073	Locating sleeve	AT400-04-127
74	AT320LH074	Screw	M5×12 GB819-85
75	AT320LH075	Steel ball	6.5 GB308-84
76	AT320LH076	Spring	0.8×5×25 B2089-80
77	AT320LH077	Pin	5×50 GB117-86
78	AT320LH078	Knob	BM8×40 B4141.14-84
79	AT320LH079	Handle lever	BM8×63 B4141.15-84
80	AT320LH080	Handle seat	12×50 GB4141.19-84
81	AT320LH081	Pin	5×50 GB117-86
82	AT320LH082	Spring	0.8×5×25 B2089-80
83	AT320LH083	Steel ball	6.5 GB308-84
84	AT320LH084	Screw	M5×12 GB819-85
85	AT320LH085	Locating sleeve	AT400-04-127
86	AT320LH086	O-seal ring	16×2.4 GB1235-76
87	AT320LH087	Left shifting fork shaft	CQ9332-02-035
88	AT320LH088	Left shifting fork	CQ9332-02-036
89	AT320LH089	Single-row ball bearing	203 GB276-89
90	AT320LH090	Pressurize washer	CQ9332-02-015
91	AT320LH091	Felt collar	16 JB/GQ0324-89
92	AT320LH092	Left sleeve	CQ9332-02-014
93	AT320LH093	Screw	M5×12 GB819-85
94	AT320LH094	Gear	CQ9332-02-013
95	AT320LH095	Key	4×10 GB1096-79
96	AT320LH096	Spring washer	10 GB93-87
97	AT320LH097	Hexagon nut	M10 GB6170-86
98	AT320LH098	Single-row ball bearing	203 GB276-89
99	AT320LH099	Pressurize washer	CQ9332-02-015
100	AT320LH100	Sleeve	CQ9332-02-048
101	AT320LH101	Screw	M5×12 GB819-85
102	AT320LH102	Taper roller bearing	2007110 GB297-84
103	AT320LH103	Spring washer	CQ9332-02-044
104	AT320LH104	Pressurize washer	CQ9332-02-043
105	AT320LH105	Felt collar	50 JB/GQ0324-89
106	AT320LH106	End cap	AT400-04-118
107	AT320LH107	Hexagon socket head screw	M5×20 GB70-85
108	AT320LH108	Lock washer for circular nut	50 GB858-88
109	AT320LH109	Spanner nut	M50×1.5 GB812-88

Tailstock Diagram

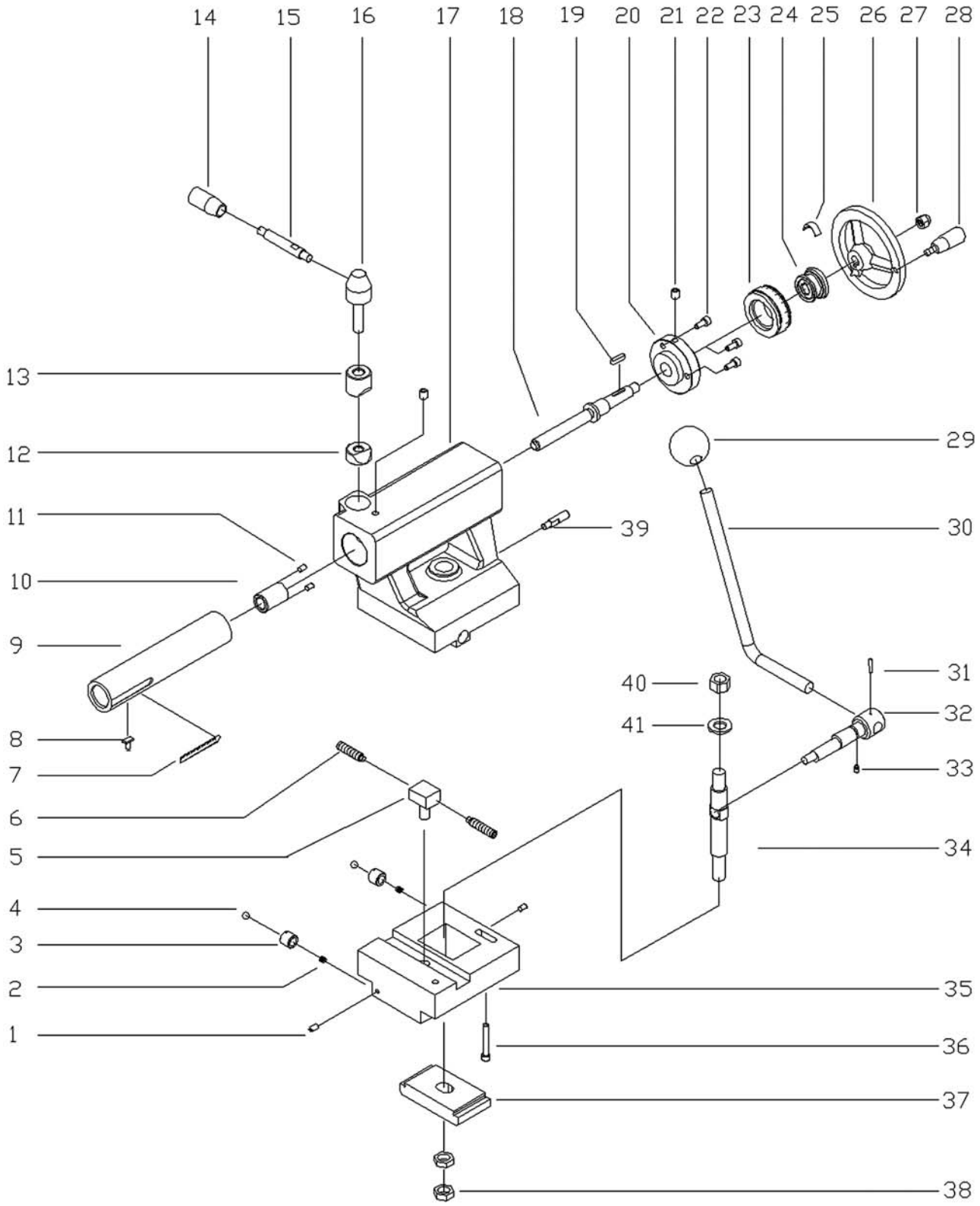

Tailstock Parts List

NO.	PARTS	DESCRIPTION	
1	AT320TS001	Set screws with cone point	M5×8 GB71-85
2	AT320TS002	Spring	1.4×7×30 GB2089-80
3	AT320TS003	Oil port plug	CQ9332-03-008
4	AT320TS004	Steel ball	GB308-77
5	AT320TS005	Tailstock nuts	CQ9332-03-009
6	AT320TS006	Hexagon socket set screws with dog point	M8×40 GB79-85
7	AT320TS007	Graduated label	AT400-02-108
8	AT320TS008	T-key	AT300-02-114
9	AT320TS009	Tailstock center sleeve	CQ9332-03-003
10	AT320TS010	Tailstock nuts	AT400-02-120
11	AT320TS011	Set screws with cone point	M5×10 GB71-85
12	AT320TS012	Locking nuts	AT400-02-107
13	AT320TS013	Locking sleeve	AT400-02-110
14	AT320TS014	Long sleeve knob	BM8×40 GB4141.14-84
15	AT320TS015	Handle lever	BM8×40 GB4141.15-84
16	AT320TS016	Handle seat	AT280-2-001
17	AT320TS017	Tailstock	CQ9332-03-001
18	AT320TS018	Tailstock screw stem	AT400-02-113
19	AT320TS019	Plain parallel key	4×28 GB1096-79
20	AT320TS020	Sleeve	CQ9332-03-011
21	AT320TS021	Oil cup	6 GB1155-79
22	AT320TS022	Hexagon socket head screw	M5×12 GB70-85
23	AT320TS023	Dial	AT400-02-114
24	AT320TS024	Sleeve	AT300-03-138
25	AT320TS025	Spring lamination	AT300-03-139
26	AT320TS026	Hand wheel	BM12×125 GB4141.22-84
27	AT320TS027	Domed cap nuts	M10 GB923-88
28	AT320TS028	Handles with sleeve	M6×50 GB4141.5-84
29	AT320TS029	Handle ball	M10×32 GB4141.11-84
30	AT320TS030	Handle lever	CQ9332-03-007
31	AT320TS031	Taper pins	5×26 GB117-86
32	AT320TS032	Shaft	CQ9332-03-010
33	AT320TS033	Slotted set screws with long dog point	M5×12 GB75-85
34	AT320TS034	Pull pole set	CQ9332-03-006
35	AT320TS035	Tailstock carriage	CQ9332-03-002
36	AT320TS036	Hexagon socket head screw	M6×50 GB70-85
37	AT320TS037	Chock	CQ9332-03-004
38	AT320TS038	Hexagon thin nuts	M12×1.5 GB6172-86
39	AT320TS039	Pin	CQ9332-03-012
40	AT320TS040	Hexagon thin nuts	M12 GB6170-86
41	AT320TS041	Plain washers	12 GB97.2-85

Left trestle Diagram

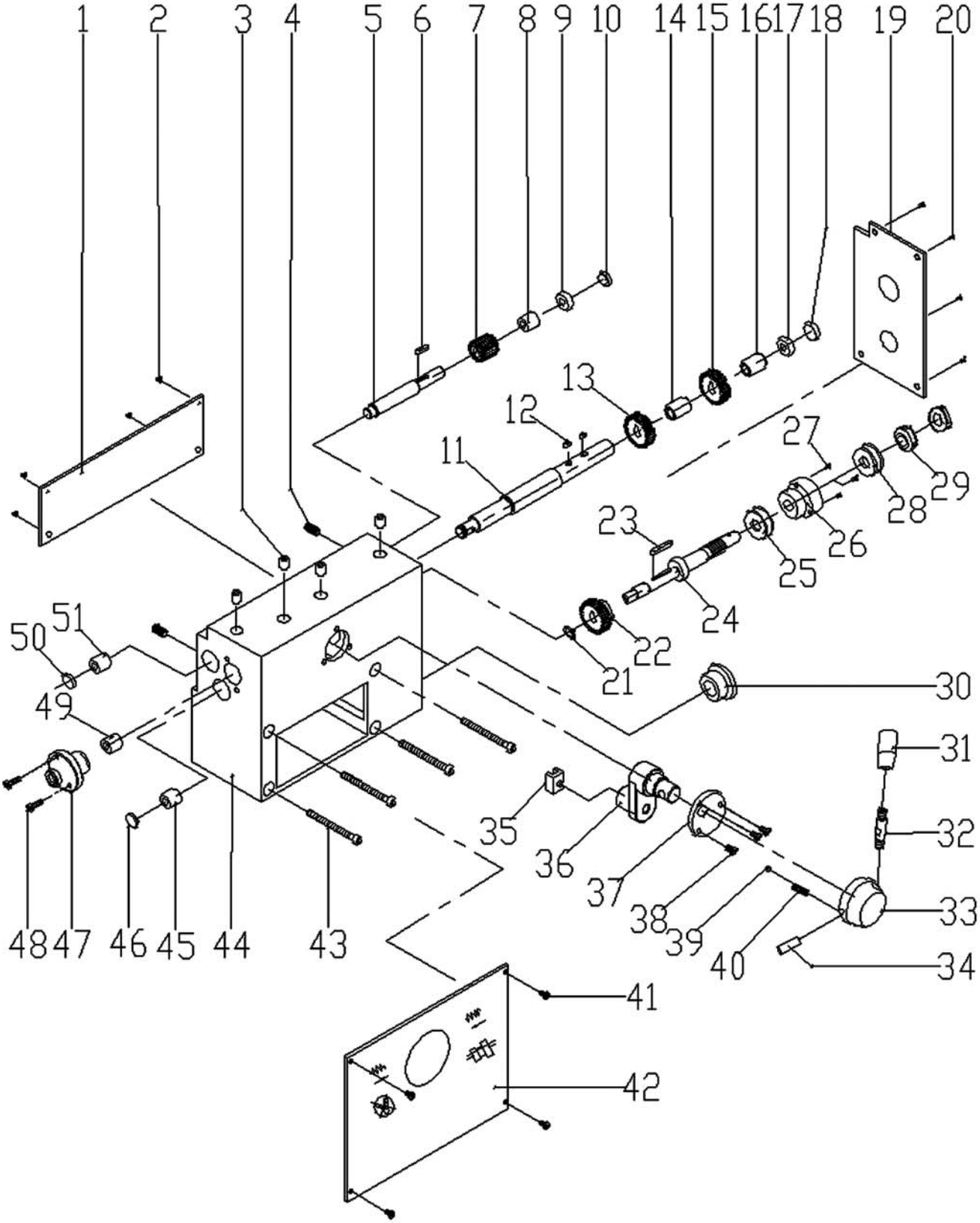

Left Trestle Parts List

NO.	PARTS	DESCRIPTION	
1	AT320LT001	Transmission cover	CQ9332-04-002
2	AT320LT002	Screws	M5×8 GB68-85
3	AT320LT003	Oil cup	8 GB1155-79
4	AT320LT004	Set screws with cone point	M5×6 GB71-85
5	AT320LT005	Shaft	CQ9332-04-004
6	AT320LT006	Key	5×16 GB1096-79
7	AT320LT007	Gear	CQ9332-04-005
8	AT320LT008	Sleeve spacer	CQ9332-04-007
9	AT320LT009	Sleeves	CQ9332-04-006
10	AT320LT010	Spigots	CQ9332-04-012
11	AT320LT011	Shaft	CQ9332-04-010
12	AT320LT012	Key	5×8 GB1096-79
13	AT320LT013	Gear	CQ9332-04-008
14	AT320LT014	Sleeve spacer	CQ9332-04-009
15	AT320LT015	Gear	CQ9332-04-008
16	AT320LT016	Sleeve spacer	CQ9332-04-007
17	AT320LT017	Sleeves	CQ9332-04-019
18	AT320LT018	Spigots	CQ9332-04-012
19	AT320LT019	Transmission cover	CQ9332A-04-015
20	AT320LT020	Screws	M4×8 GB65-85
21	AT320LT021	E-clip	16 GB894.1-86
22	AT320LT022	Gear	CQ9332-04-014
23	AT320LT023	key	5×32 GB1096-79
24	AT320LT024	Shaft	CQ9332-04-013
25	AT320LT025	Bearing	8102 GB301-64
26	AT320LT026	Bearing sleeve	AT520-03-109
27	AT320LT027	Screws	M5×16 GB818-85
28	AT320LT028	Bearing	8102 GB301-64
29	AT320LT029	Round nut	M14×1.5 GB812-88
30	AT320LT030	Sleeves	CQ9332A-04-003
31	AT320LT031	Knob	BM8×40 GB4141.14-84
32	AT320LT032	Handle lever	BM8×40 GB4141.15-84
33	AT320LT033	Handle seat	12×50 GB4141.19-84
34	AT320LT034	Taper pin	5×50 GB117-86
35	AT320LT035	Shifting yoke	AT520-03-117
36	AT320LT036	Shifting fork plate	CQ9332-04-003
37	AT320LT037	Locating plate	AT300-03-134
38	AT320LT038	Slotted countersunk-Head screws	M5×10 GB68-85
39	AT320LT039	Steel ball	6.5 GB308-84
40	AT320LT040	Spring	0.8×5×25 GB2089-84
41	AT320LT041	Cross recessed pan head screws	M3×6 GB818-85
42	AT320LT042	Product scutcheon	CQ9332A-00-002
43	AT320LT043	Hexagon socket head screw	M8×100 GB70-85
44	AT320LT044	Left trestle	CQ9332A-04-001
45	AT320LT045	Sleeves	CQ9332-04-018
46	AT320LT046	Spigots	CQ9332-04-012
47	AT320LT047	Pedestal	CQ9332-04-011
48	AT320LT048	Hexagon socket head screw	M5×12 GB70-85
49	AT320LT049	Sleeves	CQ9332-04-019
50	AT320LT050	Spigots	CQ9332-04-012
51	AT320LT051	Sleeves	CQ9332-04-006

Apron Diagram

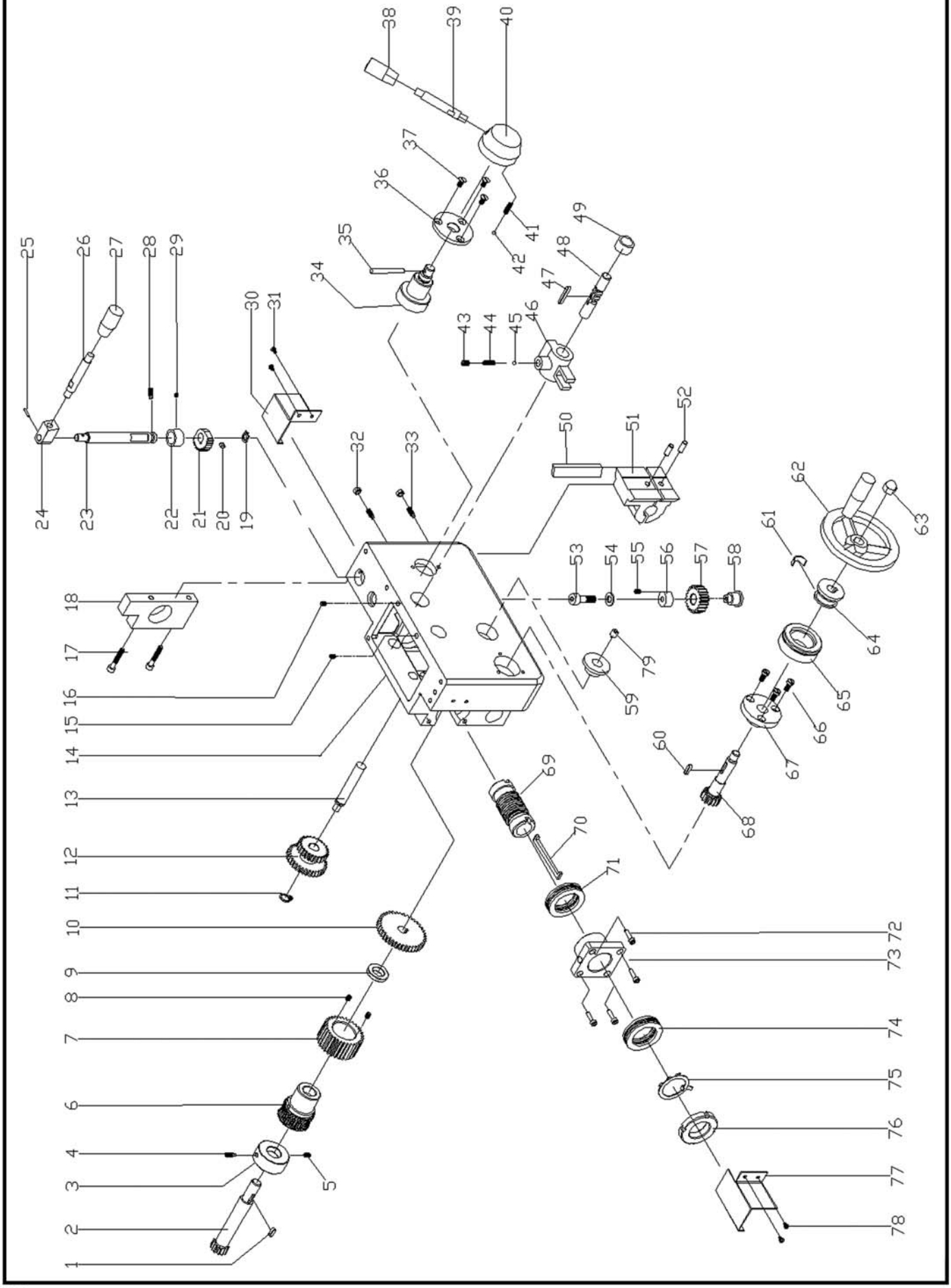

Apron Parts List

NO.	PARTS	DESCRIPTION	
1	AT320AP001	Key	6×12 GB1096-79
2	AT320AP002	Gear shaft	AT400A-03-203
3	AT320AP003	Sleeve	AT400A-03-206
4	AT320AP004	Screws	M6×12 GB75-85
5	AT320AP005	Set screws with cone point	M6×12 GB71-85
6	AT320AP006	Worm gear	AT400A-03-205
7	AT320AP007	Gear	CQ9332-05-010
8	AT320AP008	Set screws with cone point	M5×8 GB71-85
9	AT320AP009	Spring washer	AT400A-03-207
10	AT320AP010	Big gear	AT400A-03-241
11	AT320AP011	E-clip	20 GB894.1-86
12	AT320AP012	Slippage gear	CQ9332-05-007
13	AT320AP013	Slippage shaft	CQ9332-05-009
14	AT320AP014	Apron body	CQ9332A-05-001
15	AT320AP015	Set screws with cone point	M5×16 GB71-85
16	AT320AP016	Set screws with cone point	M6×20 GB71-85
17	AT320AP017	Hexagon socket head screw	M5×35 GB70-85
18	AT320AP018	Apron body right cover	CQ9332A-05-025
19	AT320AP019	E-clip	12 GB894.1-86
20	AT320AP020	Key	4×8 GB1096-79
21	AT320AP021	Gear	CQ9332-05-029
22	AT320AP022	Sleeve	CQ9332-05-014
23	AT320AP023	Axis	CQ9332-05-013
24	AT320AP024	Square handle seat	AT520A-03-213
25	AT320AP025	Taper pins	3×20 GB117-86
26	AT320AP026	Handle lever	BM8×50 GB4141.15-84
27	AT320AP027	Handle sleeve B-plastic	BM8×40 GB4141.14-84
28	AT320AP028	Screws	M5×16 GB75-85
29	AT320AP029	Set screws with cone point	M5×8 GB71-85
30	AT320AP030	Right rod baseboard	CQ9332-00-106
31	AT320AP031	Screws	M5×8 GB71-85
32	AT320AP032	Hexagon nut	M5 GB6170-86
33	AT320AP033	Screws	M5×25 GB75-85
34	AT320AP034	Shaft	AT400A-03-212
35	AT320AP035	Taper pins	5×50 GB117-86
36	AT320AP036	Sleeve	AT400A-03-221
37	AT320AP037	Screw	M4×12 GB68-85
38	AT320AP038	Handle sleeve B-plastic	BM8×40 GB4141.14-84
39	AT320AP039	Handle lever	BM8×40 GB4141.15-84
40	AT320AP040	Handle seat	12×50 GB4141.19-84

Apron Parts List

NO.	PARTS	DESCRIPTION	
41	AT320AP041	Spring	0.8×5 ×25 GB2089-80
42	AT320AP042	Steel ball	6.5 GB308-84
43	AT320AP043	Flat-point set screw	M6×8 GB73-85
44	AT320AP044	Spring	0.6×5 ×15 GB2089-80
45	AT320AP045	Steel ball	5 GB308-84
46	AT320AP046	Shifting fork	AT400A-03-216
47	AT320AP047	Key	5×40 GB1096-79
48	AT320AP048	Shifting fork shaft	CQ9332-05-020
49	AT320AP049	Sleeve	CQ9332-05-021
50	AT320AP050	Chock	AT400-03-127
51	AT320AP051	Screw nut	AT400-03-125
52	AT320AP052	Column pins	6×18 GB119-86
53	AT320AP053	Hexagon socket head screw	M6×25 GB70-85
54	AT320AP054	Spring washer	6 GB93-87
55	AT320AP055	Set screws with cone point	M4×8 GB71-85
56	AT320AP056	Sleeve	CQ9332-05-015
57	AT320AP057	Middle gear	CQ9332-05-017
58	AT320AP058	Shaft	CQ9332-05-016
59	AT320AP059	Bearing sleeve	AT400-03-132
60	AT320AP060	Key	4×28 GB1096-79
61	AT320AP061	Spring lamination (Leaf spring)	AT300-03-139
62	AT320AP062	Hand wheel	B12×125GB4141.22-84
63	AT320AP063	Domed cap nuts	M10 GB923-88
64	AT320AP064	Sleeve	AT300-03-138
65	AT320AP065	Dial	CQ9332-05-012
66	AT320AP066	Screw	M4×12 GB65-85
67	AT320AP067	Flange sleeve	AT400A-03-227
68	AT320AP068	Gear shaft	CQ9332-05-011
69	AT320AP069	Worm shaft	CQ9332-05-022
70	AT320AP070	Saddle Key	4×28 JB/GQ0217-89
71	AT320AP071	Thrust ball bearing	8106 GB301-84
72	AT320AP072	Hexagon socket head screw	M5×16 GB70-85
73	AT320AP073	Worm shaft	CQ9332-05-023
74	AT320AP074	Thrust ball bearing	8106 GB301-84
75	AT320AP075	Tang washer	30 GB858-88
76	AT320AP076	Round nut	M30×1.5 GB812-88
77	AT320AP077	Left rod baseboard	CQ9332-00-105
78	AT320AP078	Screws	M5×8 GB71-85
79	AT320AP079	Oil cup	8 GB1155-79

Compound Box Diagram

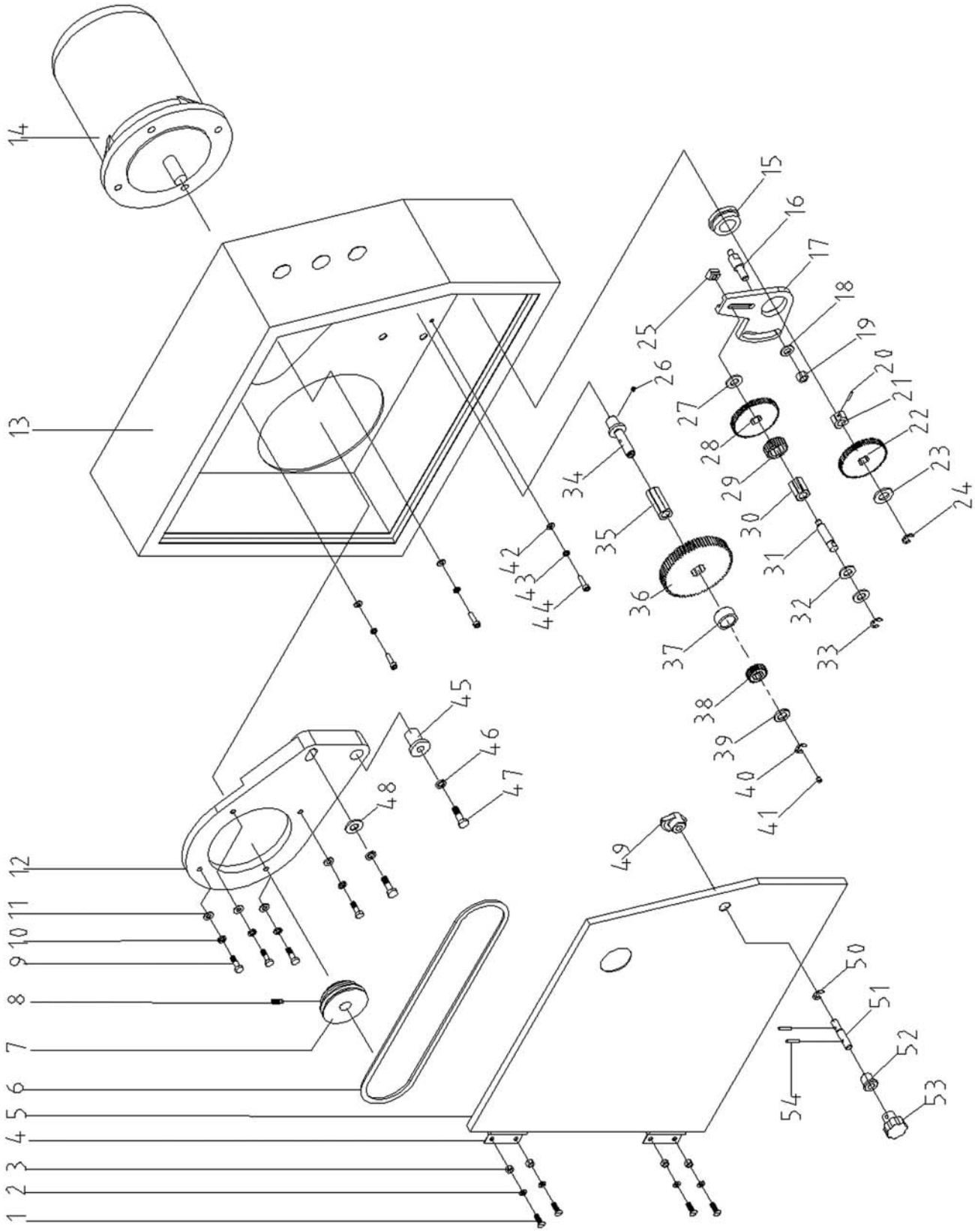

Compound Box Parts List

NO.	PARTS	DESCRIPTION	
1	AT320CB001	Screws	M4×10 GB65-85
2	AT320CB002	Spring washers	4 GB93-87
3	AT320CB003	Hexagon nuts	M4 GB6170-86
4	AT320CB004	Butt hinge	
5	AT320CB005	Door	CQ9332A-06-002
6	AT320CB006	V-belt o-type	710 GB1171-74
7	AT320CB007	Motor pulley	CQ9332-00-002A
8	AT320CB008	Screws	M6×8 GB75-85
9	AT320CB009	Hexagon heed bolts	M8×25 GB5782-86
10	AT320CB010	Spring washers	8 GB93-87
11	AT320CB011	Washer	8 GB97.2-85
12	AT320CB012	Motor mount plate	CQ9332-00-001
13	AT320CB013	Compound box	CQ9332A-06-001
14	AT320CB014	220/110V Mount,60HZ	JY8034(7500W)
15	AT320CB015	Sleeve	CQ9332-04-017
16	AT320CB016	Shaft	AT400-03-146
17	AT320CB017	Change gear plate	AT400-03-144
18	AT320CB018	Washer	10 GB97.2-85
19	AT320CB019	Hexagon nut	M10 GB6170-86
20	AT320CB020	Parallel key	3×18 GB119-86
21	AT320CB021	Spline housing	AT400-03-141
22	AT320CB022	Change gear	CQ9332-00-015
23	AT320CB023	Washer	12 GB97.2-85
24	AT320CB024	"E" rings	9 GB896-86
25	AT320CB025	T-nut	AT400-03-143
26	AT320CB026	Flat-point screw	M5×6 GB73-85
27	AT320CB027	Washer	12 GB97.2-85
28	AT320CB028	Change gear	CQ9332-00-015
29	AT320CB029	Change gear	CQ9332-00-015
30	AT320CB030	Spline housing	AT400-03-145
31	AT320CB031	Small shaft	AT400-03-142
32	AT320CB032	Washer	12 GB97.2-85
33	AT320CB033	"E" rings	9 GB896-86
34	AT320CB034	Small shaft	AT400-04-108
35	AT320CB035	Spline housing	AT400-04-112
36	AT320CB036	Big gear wheel	AT400A-04-109
37	AT320CB037	Sleeves	AT400-04-110
38	AT320CB038	Change gear	CQ9332-00-015
39	AT320CB039	Washer	12 GB97.2-85
40	AT320CB040	"E" rings	9 GB896-86
41	AT320CB041	Oil cup	6 GB1155-79
42	AT320CB042	Washer	6 GB97.2-85
43	AT320CB043	Spring washers	6 GB93-87
44	AT320CB044	Hexagon socket head screw	M6×16 GB70-85
45	AT320CB045	Sleeves	CQ9332-00-007
46	AT320CB046	Spring washers	10 GB93-87
47	AT320CB047	Heragon heed bolts	M10×45 GB5782-86
48	AT320CB048	Washer	10 GB96-85
49	AT320CB049	Door-knob	AT300-05-108
50	AT320CB050	"E" rings	6 GB896-86
51	AT320CB051	Shaft	AT300-05-110
52	AT320CB052	Slationary sleeve	AT300-05-111
53	AT320CB053	Star-grip knob	8×32 GB4141.29-84
54	AT320CB054	Taper pins	3×18 GB117-86

Drill-Mill Head Diagram

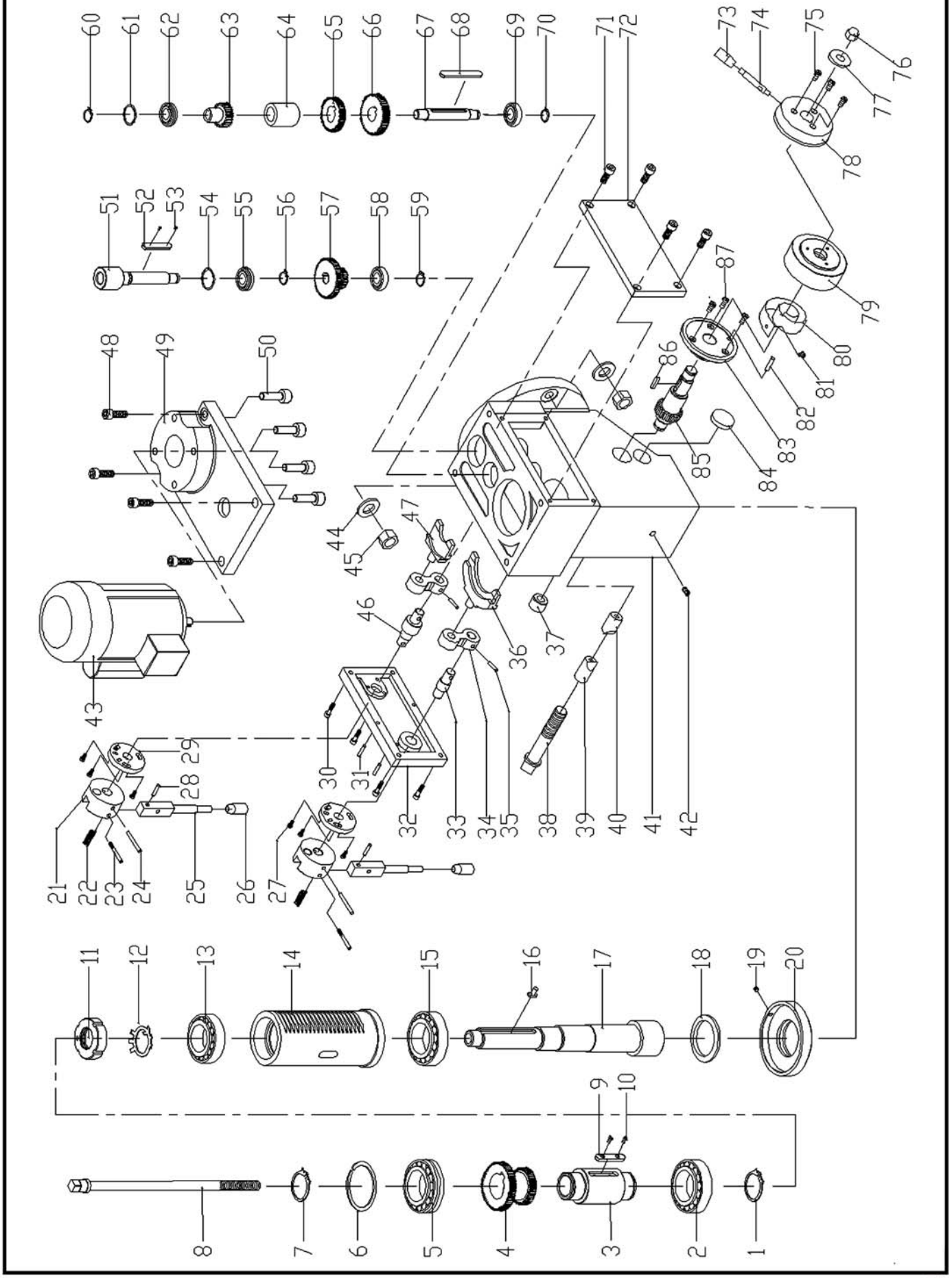

Drill-Mill Head Parts List

NO.	PARTS	DESCRIPTION	
1	AT320DP001	External snap ring	35 GB894.1-86
2	AT320DP002	Roller bearing	207 GB276-89
3	AT320DP003	Shaft sleeve	AT320-09-020
4	AT320DP004	Gear	AT320-09-021A
5	AT320DP005	Radial ball bearing	50207 GB277-89
6	AT320DP006	Bearing loop	72 JB/GQ0251-89
7	AT320DP007	External snap ring	35 GB894.1-86
8	AT320DP008	Staff	AT320-09-018
9	AT320DP009	Plain parallel key	8×45 GB1097-79
10	AT320DP010	Round-Head setscrew	M3×8 GB67-85
11	AT320DP011	Round nut	M30×1.5 GB812-88
12	AT320DP012	Washer	30 GB858-88
13	AT320DP013	Tapered roller bearing	2007106 GB297-84
14	AT320DP014	Spindle sleeve	AT320-09-008-2
15	AT320DP015	Tapered roller bearing	D2007107 GB297-84
16	AT320DP016	T-key	AT320-09-022
17	AT320DP017	Drill/mill spindle	AT320-09-009-2
18	AT320DP018	Felt collar	45 JB/GQ0324-89
19	AT320DP019	Cone-point setscrews	M4×12 GB71-85
20	AT320DP020	Bearing cap	AT320-09-013
21	AT320DP021	Handle seat	AT320-09-034
22	AT320DP022	Spring	1×7×12 GB2089-80
23	AT320DP023	Join screw	AT320-09-035
24	AT320DP024	Taper pin	5×50 GB117-86
25	AT320DP025	Locating handle	AT320-09-044
26	AT320DP026	Long sleeve knob	BM8×40 GB4141.14-84
27	AT320DP027	Round-Head setscrew	M4×8 GB67-85
28	AT320DP028	Straight pin	5×45 GB119-86
29	AT320DP029	Locating plate	AT320-09-036
30	AT320DP030	Hexagon socket cap head screws	M5×16 GB70-76
31	AT320DP031	Taper pin	4×20 GB117-86
32	AT320DP032	Left transmission cover	AT320-09-042
33	AT320DP033	shifting fork shaft	AT320-09-040
34	AT320DP034	Rocker arm	AT320-09-038
35	AT320DP035	Taper pin	5×25 GB117-86
36	AT320DP036	Big shifting fork	AT320-09-041
37	AT320DP037	Shaft sleeve	AT320-09-029
38	AT320DP038	Impact into screw	AT320-09-030
39	AT320DP039	Locking sleeve	AT320-09-031
40	AT320DP040	Locking nut	AT320-09-32
41	AT320DP041	Drilling-milling head box	AT320-09-001A
42	AT320DP042	Hexagon socket set screw	M8×18 GB79-85
43	AT320DP043	Motor	CO2 7144/ 550W
44	AT320DP044	Plain washrs	10 GB97.2-85

Drill-Mill Head Parts List

NO.	PARTS	DESCRIPTION	
45	AT320DP045	Hexagon nut	M10 GB6170-86
46	AT320DP046	Shifting fork shaft	AT320-09-031
47	AT320DP047	Small shifting fork	AT320-09-039
48	AT320DP048	Hexagon socket cap head screws	M8×20 GB70-76
49	AT320DP049	Motor mount plate	AT320-09-002
50	AT320DP050	Hexagon socket cap head screws	M6×20 GB70-76
51	AT320DP051	Input shaft	AT320-09-004A
52	AT320DP052	Plain parallel key	AT320-09-005
53	AT320DP053	Screw	M2×5 GB818-85
54	AT320DP054	Bearing loop	40 JB/GQ0251-89
55	AT320DP055	Radial ball bearing	50207 GB277-89
56	AT320DP056	External snap ring	17 GB894.1-86
57	AT320DP057	Duplicate gear	AT320-09-003A
58	AT320DP058	Radial ball bearing	60201 GB278-89
59	AT320DP059	External snap ring	12 GB894.1-86
60	AT320DP060	External snap ring	12 GB894.1-86
61	AT320DP061	Bearing loop	32 JB/GQ0251-89
62	AT320DP062	Radial ball bearing	50207 GB277-89
63	AT320DP063	Gear	AT320-09-015A
64	AT320DP064	Sleeve spacer	AT320-09-016
65	AT320DP065	Gear	AT320-09-006
66	AT320DP066	Gear	AT320-09-007
67	AT320DP067	Middle shaft	AT320-09-017
68	AT320DP068	Plain parallel key	5×55 GB1096-72
69	AT320DP069	Radial ball bearing	60201 GB278-89
70	AT320DP070	External snap ring	12 GB894.1-86
71	AT320DP071	Hexagon socket cap head screws	M5×16 GB70-76
72	AT320DP072	Right transmission cover	AT320-09-042
73	AT320DP073	Long sleeve knob	M8×40 GB4141.14-84
74	AT320DP074	Handle lever	8×50×12 GB4141.15-84
75	AT320DP075	Slotted pan head screws	M4×16 GB67-76
76	AT320DP076	Domed cap nuts	M8 GB923-76
77	AT320DP077	Adjust ment washer	AT320-09-024
78	AT320DP078	Handle seat	AT320-09-025
79	AT320DP079	Calibrated dial	AT320-09-026
80	AT320DP080	Spring lamination	AT320-09-043
81	AT320DP081	Screw	M4×8 GB818-85
82	AT320DP082	Lever	AT320-09-045
83	AT320DP083	Spring seat	AT320-09-027
84	AT320DP084	Locking base	AT320-09-033
85	AT320DP085	Gear shaft	AT320-09-028
86	AT320DP086	Plain parallel key	5×10 GB1096-72
87	AT320DP087	Screw	M5×10 GB819-85

Warranty

Bolton Tools Inc. warrants all Bolton Tools machinery to be free of defect from workmanship and materials for a period of one year from the date of original purchase by the original purchaser. This warranty does not apply to damage due directly or indirectly to misuse, lack of maintenance, abuse, negligence, accidents, repairs or alterations outside of our facilities.

To take advantage of this warranty, items that fail under guarantee can be returned to us. Responsibility for safe return of freight is with the customer. Please ensure a clear explanation of the fault is included with any return. If our inspection verifies the defect, we will either repair or replace the product at our discretion or we may elect to refund the purchase price if we cannot readily and quickly provide you with a replacement. We will return repaired products at our expense, but if it is determined there is no defect, or that the defect resulted from cause not within the scope of our warranty, then the original owner must bear the cost of storing and returning the product. In order to place a warranty claim you must contact our Customer Service Department at (877)888-5913. Proof of purchase must accompany the merchandise.

The sole written warranty and all warranties that may be implied by law include any merchantability or fitness, for any particular purpose, are hereby limited to the duration of this written warranty.

We shall in no event be liable for death, injuries to persons or property for incidental, contingent, special or consequential damages arising from the use of our products. Some states do not allow the exclusion or limitation of incidental or consequential damages, so the above limitation of exclusion may not apply to you.

Title: Mr/Mrs/Miss/Ms Surname

Forename:

Address:

Postal Town:

County:

Post Code:

E-mail address:

Product Purchased Date of Purchase i.e.01/01/2000

Model No:

Description:

Serial No(IF ANY):

The following information is given on a voluntary.

It will be used for marketing purposes to help us develop better products and services

Of course .all information is strictly confidential.

Application Type(tick one or more)

Bodyshop		Garage	
Fleet Maintenance Dept		Agricultural Engineer	
Industrial Maintenance		Local Utility	

Other(Specify)

Which Publications do you regularly read(tick one or more)

Popular Mechanics		Home Shop Machinist	
Hand Loader		Modeltec	
Family Handyman		Popular Science	
RC Modler		Wood	
Today's Homeowner		Cabinet Maker	
Rifle		Shop notes	
Live Steam		Shotgun News	
Woodshop news		Journal of light Cont.	

Other(Specify)

WHERE DO YOU NORMALLY BUY YOUR MACHINE?

COMPANY:.....

TOWN:.....

HOW MUCH DO YOU SPEND ON TOOLS AND EQUIPMENT PER YEAR?

UNDER$200		$200-500		$500-800	
$800-1000		$1000-2000		$2000+	

WHAT IS YOUR PERCEPTION/EXPERIENCE OF BOLTONTOOLS?

PUT A CROSS ON YOU CHOICE (ONE ONLY PER LINE)	EXCELLENT	GOOD	AVERAGE	BELOW AVERAGE	POOR
PRODUCT QUALITY	1	2	3	4	5
PRODUCT RANGE	1	2	3	4	5
SPARE PART SERVICE	1	2	3	4	5
TELESALES SERVICE	1	2	3	4	5
INTERNET SITE	1	2	3	4	5
PROMOTIONS	1	2	3	4	5
WARRANTIES	1	2	3	4	5
PRODUCT VALUE	1	2	3	4	5
DELIVERY	1	2	3	4	5

WHAT ITEMS NOT CURRENTLY INCLUDED WOULD YOU LIKE TO SEE IN OUR CATALOGUE?

ANY OTHER COMMENTS?

THANK YOU FOR COMPLETING THIS QUESTIONNAIRE.

This information is primarily held for warranty and marketing analysis.From time to time we may update you with information of our newest products.We may also provide your details to other parties where we feel their services or producgs mqy be of interest to you.If you do not wish us to mail or forward information using you details please tick here: